Fuse Box

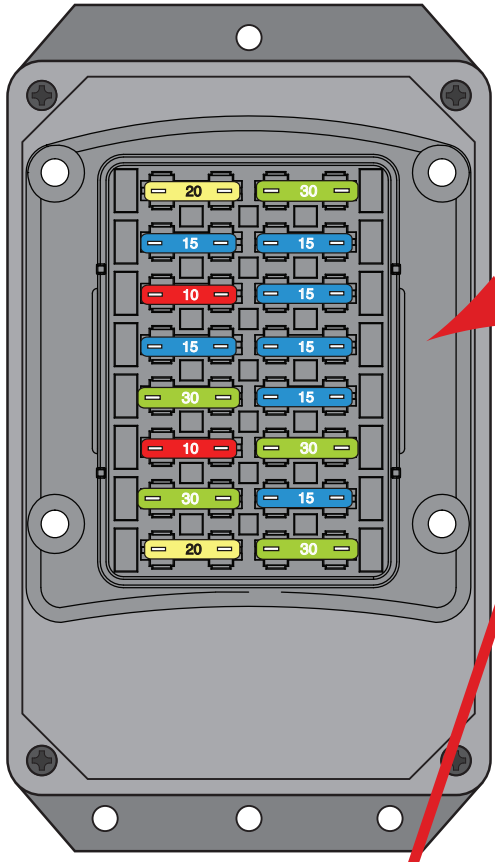

Fuse Box Lid

NOTE:
If your fuse box and fuse box lid look like this, these **ARE** the correct instructions for your application. If the word “BUSSMANN” appears on your fuse box or fuse box lid, you have have an earlier version of this kit and these **ARE NOT** the correct instructions.

KIT BOX CONTENTS:

Number	Description
510476	Alternator & Main Power Connection Kit
510883	Main Dash Harness Kit w/ AAW Fuse Panel
510653	Instrument Cluster Wiring Kit
510654	Rear Body Wiring Kit
510657	Headlight Bucket Wiring Kit
510730	Vehicle Speed Sensor, VSS, Lead Wires
510905	Front Light Wiring Kit
510906	Engine Wiring Kit
500042	Floor Dimmer Switch
510264	Headlight Switch
510557	Fuse, Relay & Flasher Kit
510655	Ignition Switch
510656	Grommet & Parts Kit
500919	Practice Terminal Kit
92973558	Kit Instruction Sheets
92971669	Firewall Template
92973597	Warning Page

American Autowire

www.americanautowire.com 856-933-0801

Classic Update Kit
1957-60 Ford Truck
510651

92973796 Rev. 0.0 03/22/2024

WARNING: This harness is intended to be used in a modified vehicle. Please read this sheet thoroughly and be sure that you understand everything explained on it prior to opening any of the enclosed packages, or before attempting to install any of the components. Once this kit has been opened or any component has been installed, the kit is not returnable.

1. This kit should be used in a **MODIFIED** application only, and is **NOT** intended as an OEM replacement.

2. This kit **Does Not** include any factory original A/C Wiring, but does include wiring for both the standard and deluxe style heater systems, and will also support any aftermarket heat or A/C system.

3. This kit **Does** support the use of a self-exciting 1-wire alternator or other style internally regulated alternator. An adapter may be necessary in some applications. Please check the manufacturer's instructions as a resistor may be necessary on the exciter wire if using anything other than a 1-wire unit.

4. This kit **WILL NOT** support the use of a factory tachometer in its original connection application as those tachometers wired the primary ignition circuit directly in series with the tachometer and then out to the positive side of the coil. Any addition of a high energy ignition (HEI), or some aftermarket ignition systems, may cause the ignition system to become non-functional. **HOWEVER**, if your original factory tachometer has been upgraded or retrofitted to a later style movement where the pulse post on the tachometer connects to the negative side of the ignition coil, or to the tachometer output of an aftermarket control module, and the feed post of the tachometer uses a conventional 12 volt ignition connection, you will be able to use this harness system.

5. This kit **IS NOT** set up with a resistance wire for a standard, points-type ignition system. It is wired with a full 12 volt primary ignition feed that is hot in both the start and run positions. It will support HEI, MSD or other electronic ignition systems as well as computerized fuel injection systems. If you wish to run a "points-type" system, a ballast resistor will be required (not included in this kit). There are illustrations on the engine connection pages, to do so.

510651 - Classic Update Series Kit
1957-60 Ford Truck

This kit contains the following components:

Bag	Part Number	Description	Quantity
	500042	Floor Dimmer Switch	1
	500919	Practice Terminal Crimping Set	1
	510655	Ignition Switch	1
	510264	Headlight Switch	1
	510557	Fuse, Relay, and Flasher Kit	1
	510656	Grommet and Parts Kit	1
G	510883	Dash/Main Harness Kit	1
H	510653	Instrument Cluster Kit	1
J	510905	Front Light Kit	1
K	510906	Engine Kit	1
M	510654	Rear Body Kit	1
N	510657	Headlight Extension Kit	1
V	510730	VSS Connection Kt	1
Z	510476	Alternator and Main Power Connection kit	1
	92973558	Introduction Instruction Sheet	1
	92973597	Warning Sheet	1
	92971669	Fuse Block Installation Sheet	1

Validate the kit contents with this component list. If there are any discrepancies with incorrect or missing parts, stop your installation and notify the supplier you purchased the kit from before proceeding.

American Autowire
www.americanautowire.com 856-933-0801

510651

92973597 Rev 0.0 6/4/2021

1957-1960 Ford truck fuse block mounting instructions

retaining clamp

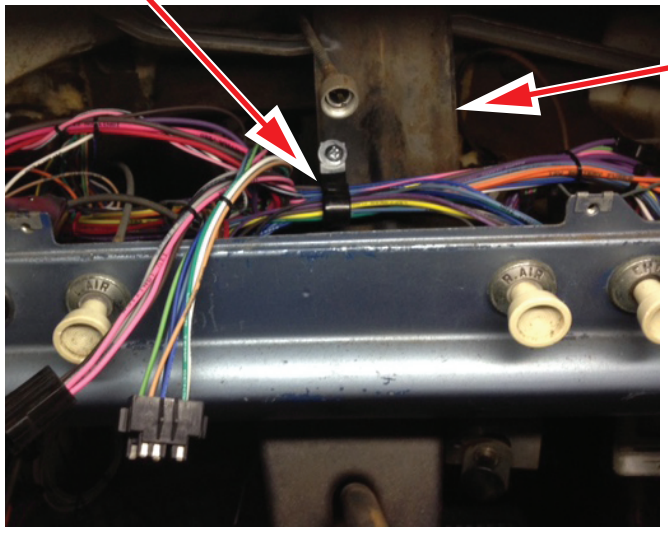

steering column/ dash support bracket

As viewed from above the steering wheel, looking into the dash

emergency brake firewall bracket

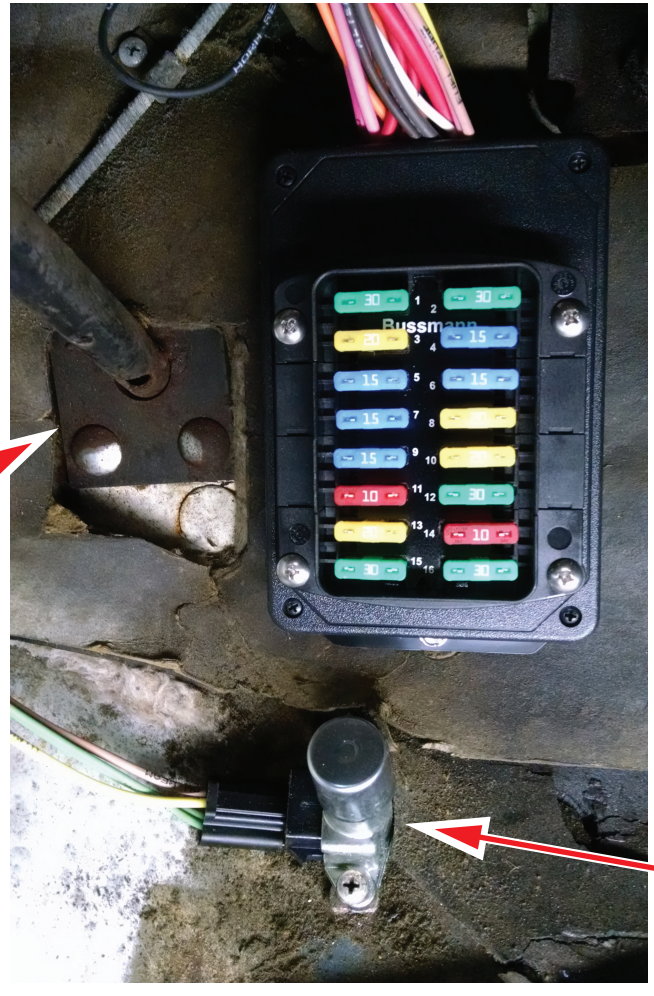

photograph is of a 1960 Ford F100 Custom Cab truck

dimmer switch

As viewed from under the dash

NOTE:

1. With the wires exiting the top end of the fuse block, position the fuse block on the firewall approximately as shown in the photo. The general location will be above the dimmer switch and to the right of the emergency brake firewall bracket. There is one mounting hole in the lower flange and three in the top flange; use the two top holes that are on either side of the wires exiting the fuse block. Mark and drill three 1/8" (.125) dia holes in your firewall. Use the three screws, "**item CCC**", in the **92971642** loose piece kit (for the **510652** dash harness), to attach the fuse block to your firewall. If necesarry, cut back any sound deadener or carpet, to mount the fuse block.

2. Be sure to check for clearances of any accessories that you might be adding. The stock clutch and brake pedal assembly pose no concerns at all when mounted in this location.

3. The design of your new AAW dash/main harness allows for you to route it approximately the same way as your original dash harness did. Once the fuse block has been attached to the firewall of the truck, the harness routes up and over top of the pedal carriage (in behind the speedometer assembly) and will be held in place by a retaining clamp, mounted to the steering column/dash support bracket as shown above; a second clamp is included, should you require it (clamps "**item S**" and hardware "**item R**" are included in parts kit **510656**). It will then continue over to the RH door jamb area above the choke and heater/blower control switches and over top of the ashtray assembly and then continuing on to the the glove box, heater box, and RH underdash courtesy lamp areas. Please take time to keep the harness wires away from any moving items.

American Autowire

www.americanautowire.com 856-933-0801

92971669

92971669 Rev 0.0 8/25/2016

Classic Update Series

1957-60 Ford Truck

START HERE !

PLEASE READ THIS BEFORE STARTING INSTALLATION !

This wiring kit is designed for ease of installation. Please read the guidelines below, BEFORE STARTING your installation to guarantee a successful job. Use an appropriate crimping tool which folds the wings of the open barrell terminals down into the wire as shown below. If you use our crimping tools and correctly crimp the included terminals, soldering is not necessary. If you are unsure about a particular crimp, soldering is recommended. Our factory crimped terminations are installed by GM approved five ton presses, and soldering these terminations is not necessary. AAW offers a great terminal crimping video entitled "Proper Crimping Video". It can be viewed by visting YouTube. Type the following address into your web browser to go directly to the video: www.youtube.com/watch?v=JAgEDoVl-co.

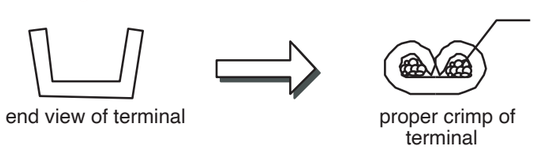

INSTALLATION INSTRUCTIONS

PLEASE READ THESE HELPFUL INSTALLATION TIPS BEFORE GOING ANY FURTHER!

Prior to installing the Dash/Main harness in your vehicle, plug all of the fuses (see a detailed picture, on **page 18**, of the fuse installation locations) and Horn Relay (**see page 9**), into this harness.

AS THIS HARNESS IS DESIGNED FOR USE IN A MODIFIED VEHICLE REQUIRING A HIGHER RATE OF CHARGE, IT DOES NOT SUPPORT THE USE OF A STOCK (ORIGINAL) GENERATOR. IT IS DESIGNED FOR USE WITH AN INTERNALLY REGULATED GM "SI" STYLE OR SINGLE WIRE STYLE ALTERNATOR. ADAPTERS (WHICH ARE NOT INCLUDED WITH THIS KIT) THAT ARE AVAILABLE FROM SEVERAL SOURCES WILL BE NECESSARY TO USE ANY ALTERNATOR OTHER THAN A GM "SI" STYLE OR SINGLE WIRE STYLE UNIT.

STEP 1: DISCONNECT YOUR BATTERY:
Disconnect the battery before installing the wiring kit to prevent any accidental shorting caused by loose bare wire ends.

STEP 2: START INSTALLING KIT (**see page 5**):
This kit is broken down into individual steps that are identified by a letter printed on the instruction sheets visible through each bag. These letters are the order of operation for installing your kit, start with bag letter G. The order of installation is shown below. You will use this main instruction sheet, **92971606**, to complete the installation process of bag G.
See page five of this instruction set and Fuse Block Mounting instruction sheet **92971669** to begin.

G - 510883 Dash Harness Kit
J - 510905 Front Light Kit
K - 510906 Engine Kit
N - 510657 Headlight Harness Kit
H - 510653 Gauge Cluster Kit
M - 510654 Rear Body Kit
Z - 510476 Alternator and Main Connection Kit

STEP 3: RECONNECT YOUR BATTERY:
When you have completed the installation and are ready to reconnect the battery, make sure that the following electrical system grounds are in place:

A. Battery is grounded to the ENGINE BLOCK.
B. Battery is grounded to the frame.
C. Engine block is grounded to the frame.
D. Body is grounded to the frame.

STEP 4: CHECK ALL ELECTRICAL FUNCTIONS:
Any non-functioning items should be checked for proper installation. Any problems with your wiring and electrical circuit functions should be addressed to American Autowire Systems, Inc. as soon as possible to avoid any warranty problems.

If you have any questions concerning this or any of our products, please feel free to call us at 1-856-933-0801.

AMERICAN AUTOWIRE MAKES IT EASY !!

MADE IN USA
VETERAN OWNED

American Autowire
www.americanautowire.com 856-933-0801

Bag
G

1957-60 Ford Truck

Classic Update Series

510651

92973558 Rev 0.0 2/1/2022

Bag G

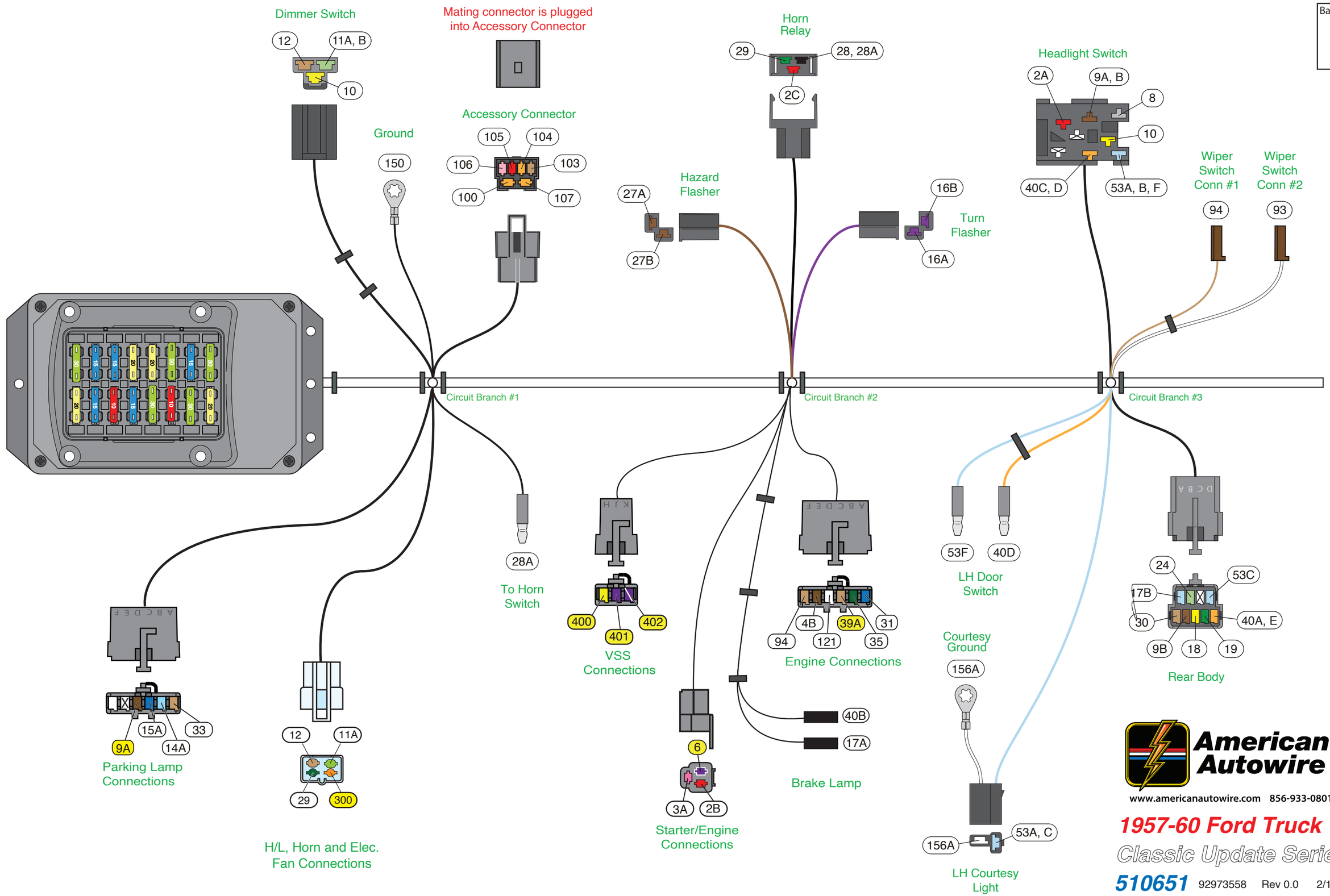

American Autowire

www.americanautowire.com 856-933-0801

1957-60 Ford Truck

Classic Update Series

510651 92973558 Rev 0.0 2/1/2022

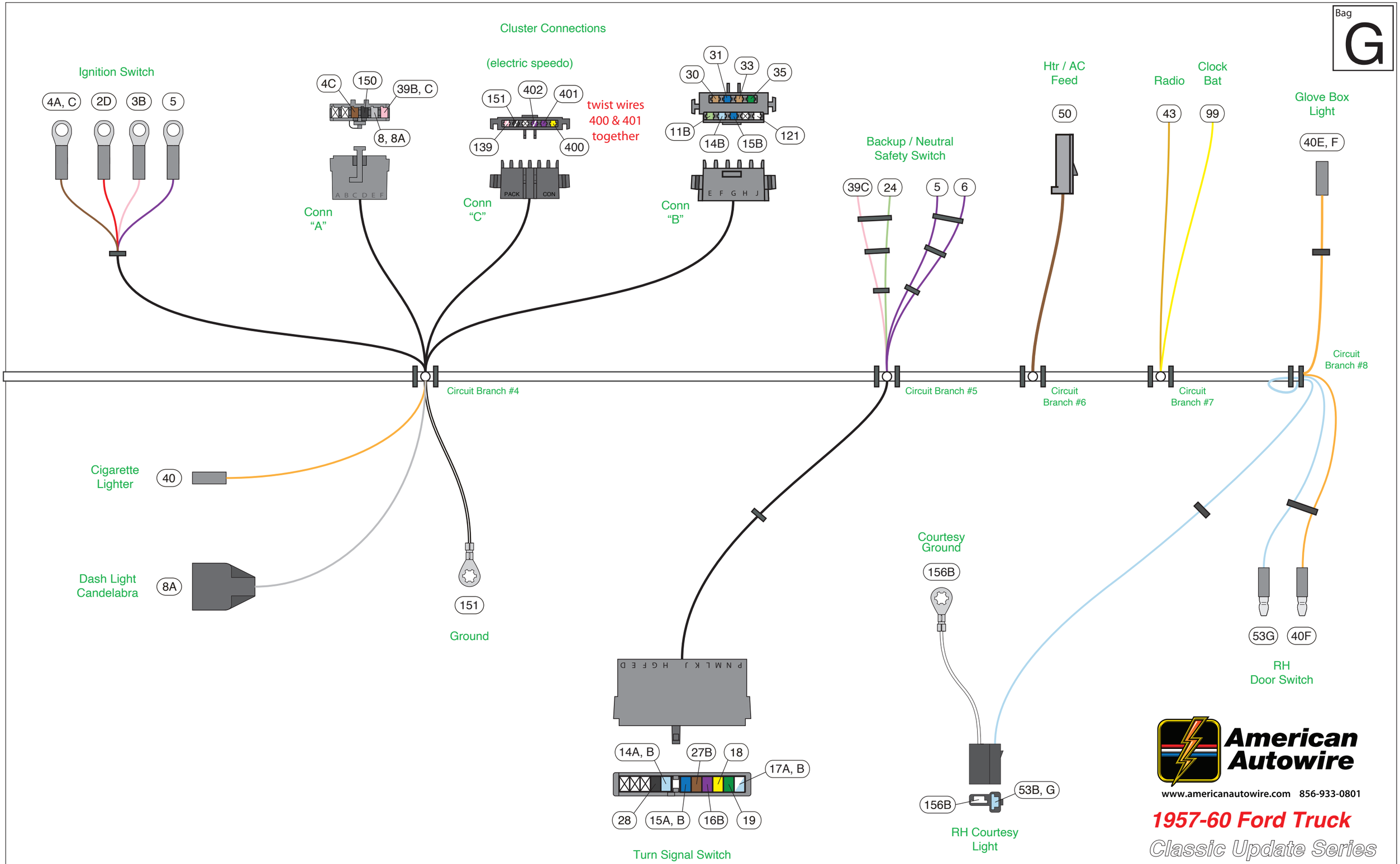
Bag
G
Cluster Connections
Ignition Switch
4A, C
2D
3B
5
4C
150
39B, C
8, 8A
A B C D E F
Conn
"A"
(electric speedo)
151
402
401
139
400
twist wires
400 & 401
together
PACK
CON
Conn
"C"
31
30
33
35
11B
14B
15B
121
E F G H J
Conn
"B"
Backup / Neutral
Safety Switch
39C
24
5
6
Htr / AC
Feed
50
Radio
43
Clock
Bat
99
Glove Box
Light
40E, F
Circuit Branch #4
Circuit Branch #5
Circuit
Branch #6
Circuit
Branch #7
Circuit
Branch #8
Cigarette
Lighter
40
Dash Light
Candelabra
8A
151
Ground
Courtesy
Ground
156B
53G
40F
RH
Door Switch
P N M L K J H G F E D
14A, B
27B
18
17A, B
28
15A, B
16B
19
Turn Signal Switch
156B
53B, G
RH Courtesy
Light
American
Autowire
www.americanautowire.com 856-933-0801
1957-60 Ford Truck
Classic Update Series
510651
92973558
Rev 0.0
2/1/2022

Bag

G

Dash Harness Jumpers and Extensions:

"DD" Starter Solenoid Resistor Bypass Wiring

"EE" GM "SI" Alternator Exciter Wiring

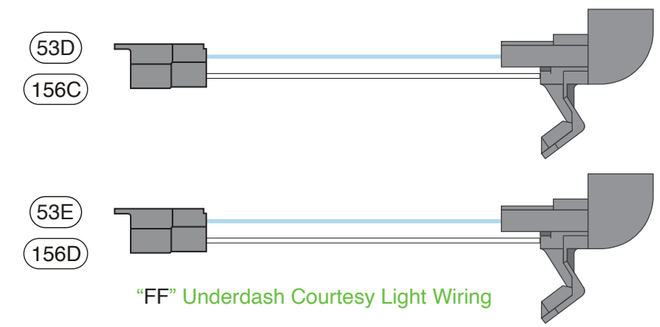

"FF" Underdash Courtesy Light Wiring

NOTE: Your new underdash courtesy light extensions, use # 631 bulbs (not included with this kit) They may be purchased at any auto parts store.

"GG" Heater Switch to Blower Motor, Standard Heater

"HH" Wiper Switch Extension

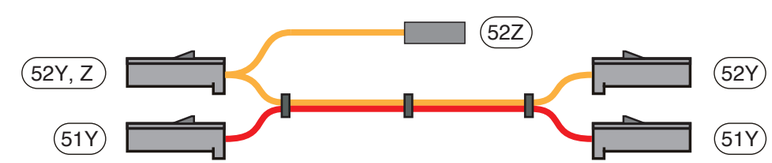

"JJ" Heater Switch to Blower Motor, Deluxe Heater

Dash Harness Parts Kit:

AAA

(Pack-Con male terminal, 11 pcs.)

BBB

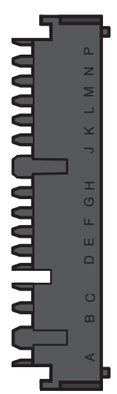

(Pack-Con 14-way male connector, 1 pc.)

CCC

(Screw, 10-16 x1", self tapping Fuse Block, 3 pcs)

American Autowire

www.americanautowire.com 856-933-0801

1957-60 Ford Truck

Classic Update Series

510651 92973558 Rev 0.0 2/1/2022

Note: Prior to installing the Dash Harness, obtain the Fuse, Flasher, and Relay Kit #510557 (located in Bag G) and plug all of the Fuses in the Fuse Block (See Figure "F" on page 18 for the location of the fuses). Install the Horn Relay and the two Flashers to the Dash Harness (see Circuit Branch #2 - Under Dash Connections).

NOTE: All Grommets, Terminals, Connectors, Door Jamb Switches, Screws, Washers, Clamps and Sleeves, can be found in Parts Kit 510656 and are denoted with one letter: "X".

The various Dash Harness Jumper Harnesses can be found in Bag G and are denoted with two letters: "XX". See page 4 for a depiction of the Jumper Harnesses.

The Fuse Block Attaching Screws and the Turn Signal Switch Connector and Terminals are found in the Dash Harness Parts Kit 92971642 and are denoted with three letters "XXX".

Main Fuse Panel Installation

Install the Fuse Block per the **Fuse Block Mounting Instructions Template 92971669**. Use the three screws **"CCC"** in the Dash Loose Piece Kit **92971642** to attach the Fuse Block.

Dash Harness Routing

The Main Dash Harness routing of the wires that go in the Instrument Panel will be the same as the original factory Instrument Panel Wiring Harness routing. The Main Dash Harness routing of the wires that go into the Engine Compartment will pass through Grommet "**F**".

Obtain Grommet **"F"** and attach to the Firewall in the original factory location. Use your original metal retainer (or a replacement) to hold the grommet in place; **the metal retainer is not included in this kit (see Figure "H" on page 14)**. You will pass the wires from **Circuit Branch #1** of your Dash Harness, that go into the Engine Compartment, through Grommet **"F"** first, from **Circuit Branch #2** second, and then the Rear Body Harness wires in **Circuit Branch #3** will be routed through Grommet **"F"** last.

J Clamps

There are four rubber coated smaller J-Clamps (item **"G"**) to be used to secure the main bundle of the Dash Harness as it routes across the Firewall in the Engine Compartment.

There are two rubber coated larger J-Clamps (item **"S"**) and two 1/4x20x1/2" screws, two 1/4x20 locking nuts, and two 1/4" Washers (item **"R"**) to secure the main bundle of the Dash Harness as it routes across the Steering Column Support Bracket in the Instrument Panel.

Circuit Branch #1 – Engine Compartment Connections (see Figure "A" on page 15). Plug the 510905 Front Light Extension harnesses onto the dash at this location and bring the wires through the firewall as shown on page 15. See page 15, "Figure A" for typical connections. For loose piece terminals and connectors, see kit # 510656.

1. Horn Switch in Steering Column Connection

When you press the Horn Switch, it turns on the Horn Relay by grounding one of the wires (circuit 28 or 28A) from the Horn Relay. Wire 28A, which is in the Dash Harness, should plug into the stock Horn Switch Ground wire coming out of the bottom of the original Ford Truck Steering Column.

If you have an Aftermarket Steering Column, Wire 28A will not be used and should be taped back. There is another circuit, Wire 28, which is also in the Dash Harness but is located in the Turn Signal Switch Connector. This Wire 28 will connect to the Aftermarket Steering Column and provide ground for the Horn Relay through the Turn Signal Switch in the Steering Column.

Wire #	Wire Color	Printing	Description
28A	Black	Horn Ground	Horn Relay ground wire to the Horn Switch.

Upgraded Brake System

NOTE: If you choose to upgrade your single reservoir Brake System to an upgraded dual resevoir Brake System with a "check light", we have provided the circuits in the Dash Harness for a Brake Warning Light (Dash lamp and switch/switch connection not provided in kit).

2. The Brake Pressure Differential Warning Switch

NOTE: if you have a Ford style twin post switch and wish to use it, simply cut the wires about 6 inches back from your old original connector, double them together, and splice them into wire assembly 33 (from page 5 of this instruction sheet) to complete your brake warning circuit. If you have an aftermarket single post switch, splice it into wire assembly 33 (from page 5 of this instruction sheet) to complete your brake warning circuit (also see Figure A on page 15).

3. Brake Pressure Differential Warning Switch Dash Harness Connection

Route wire 33 from the Dash Harness to the master cylinder area, cut to length, and splice it to the Brake Pressure Differential Warning Switch Extension (if needed).

Wire #	Wire Color	Printing	Description
33	Tan	BRAKE LIGHT/SWITCH	Brake Warning Light wire.

4. Aftermarket Electric Fan Wire

This wire is a fused 12V Accessory feed wire which comes directly from the Fuse Block and is intended to be used as the relay trigger wire for an Electric Fan Relay. Route this orange "ELECTRIC FAN" wire (circuit 300) to a relay kit.

Note: An Optional Relay Kit (Universal Relay Kit 500479 or Universal Waterproof Relay Kit 500093) can be purchased from AAW. Connect per the instructions in the Relay Kit.

Wire #	Wire Color	Printing	Description
300	Orange	ELECTRIC FAN	Electric Fan Relay Feed.

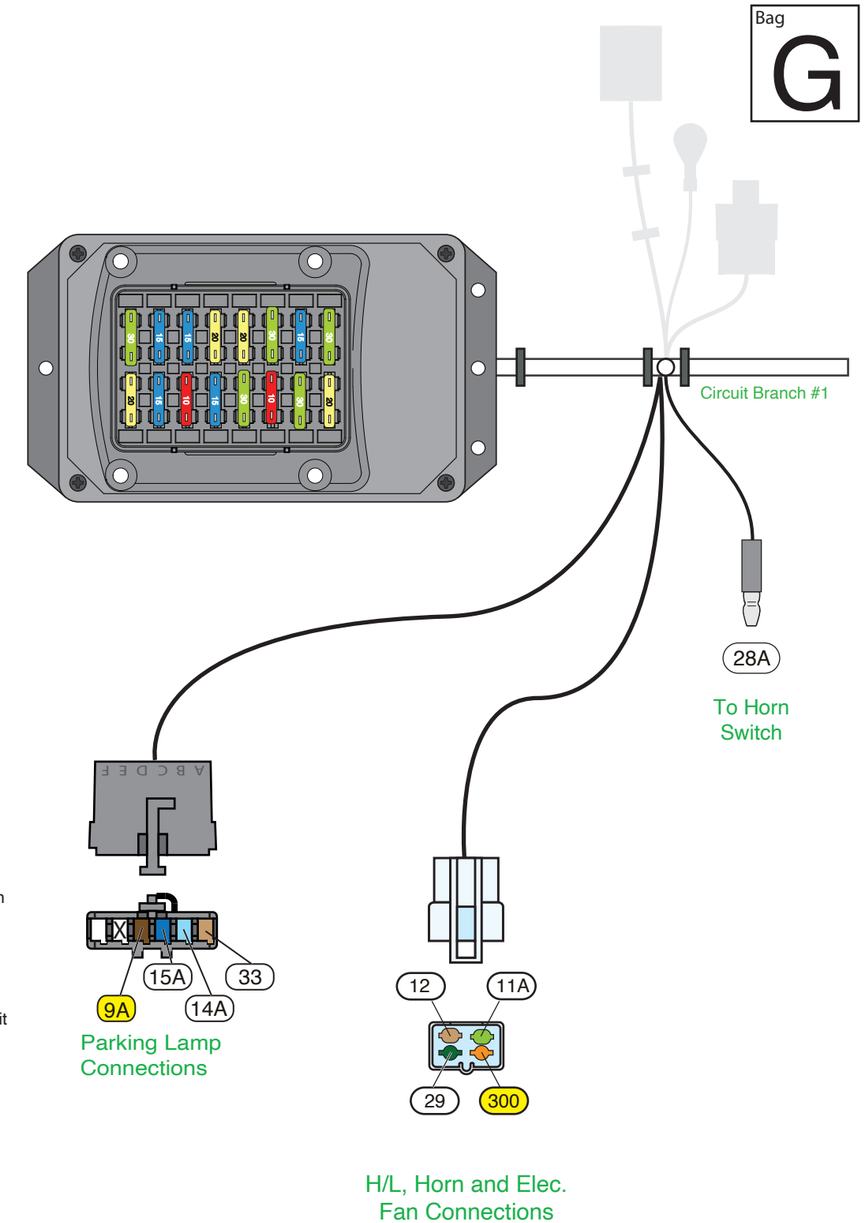

American Autowire

www.americanautowire.com 856-933-0801

1957-60 Ford Truck

Classic Update Series

510651 92973558 Rev 0.0 2/1/2022

Bag **G**

Preparing the Parking Light Assemblies (see Figure "A" on page 15)

Note: For all vehicles, you will use your original Park/Turn Light Socket and Pigtail Assemblies but will have to replace the original 2-way molded pigtail connector, or the original two 1-way molded pigtail connectors with a 2-way connector **"V"** and terminals **"W"**. Cut the original molded connector(s) from the Park/Turn Light pigtail and crimp on a terminal **"W"** to each wire. Route the two wires through the access hole and seat the original pigtail grommet **(if equipped)** in the hole. Plug these **"W"** terminals into connector **"V"**. Note that the wire function/colors are as follows:
LH Turn Signal – green/white (Ford) to light blue (AAW).
RH Turn Signal – white/blue (Ford) to dark blue (AAW).
Park Lights – black/yellow (Ford) to brown (AAW).

5. Park Light Wire Connections

For the left hand (LH) Park Light connection, obtain the brown "PARK LIGHTS" wire (circuit 9A) from the Dash Harness and route the loose end of this wire to the LH Park/Turn Signal Light pigtail and cut to length, double this wire with the cutoff portion of the brown wire and crimp on terminal **"C"**. Plug this wire into the 2-way connector **"T"**, route the cutoff portion of the brown wire to the RH Park/Turn Signal Light pigtail. Cut to length, crimp on terminal **"B"** and plug into the other 2-way connector **"T"**.

Wire #	Wire Color	Printing	Description
9A	Brown	PARK LIGHTS	Park Lights feed.

6. LH Turn Signal Light Wire Connections

Obtain the light blue "LEFT FRONT TURN" wire (circuit 14A) from the Dash Harness and route the loose end of the wire to the LH Park/Turn Signal Light pigtail and cut to length, crimp on terminal **"B"** and insert into connector **"T"**.

Wire #	Wire Color	Printing	Description
14A	Light Blue	LEFT FRONT TURN	Feed to the LH Front Turn Signal Light.

7. RH Turn Signal Light Wire Connections

Obtain the dark blue "RIGHT FRONT TURN" wire (circuit 15A) from the Dash Harness and route the loose end of the wire to the RH Park/Turn Signal Light pigtail and cut to length, crimp on terminal **"B"** and insert into connector **"T"**.

Wire #	Wire Color	Printing	Description
15A	Dark Blue	RIGHT FRONT TURN	Feed to the RH Front Turn Signal Light.

Front Headlamp Connections (see Figure "A" on page 15)

Headlight Harness Kit

Obtain the **Headlight Harness Kit 510657** and connect to the LH and RH Headlights (see the Instructions **92971656** in **Bag N** for the Headlight connections).

8. Low Beam Headlight Wire Connections

Obtain the tan "HEADLIGHT-LOW BEAM" wire (circuit 12) from the Dash Harness and route the loose end of the wire to the LH Headlight Bucket Harness, cut to length, double the tan wire with the tan wire that was just cut off, crimp on terminal **"X"**, and insert into connector **"U"**. Route the loose end of the tan wire to the RH Headlight Bucket Harness, cut to length, crimp on terminal **"W"** and plug into the other connector **"U"**. Be sure that the tan wire aligns with the tan wire in the Headlight Bucket Harness.

Wire #	Wire Color	Printing	Description
12	Tan	HEADLIGHT-LOW BEAM	Feed to the Low Beam Headlights.

9. High Beam Headlight Wire Connections

Obtain the light green "HEADLIGHT-HI BEAM" wire (circuit 11A) from the Dash Harness and route the loose end of the wire to the LH Headlight Bucket Harness, cut to length, double the light green wire with the light green wire that was just cut off, crimp on terminal **"X"**, and insert into connector **"U"**. Route the loose end of the light green wire to the RH Headlight Bucket Harness, cut to length, crimp on terminal **"W"** and plug into the other connector **"U"**. You can connect to the Headlight Bucket Harnesses.

Wire #	Wire Color	Printing	Description
11A	Light Green	HEADLIGHT-HI BEAM	Feed to the High Beam Headlights.

10. Horn Wire Connection

Obtain the dark green "HORN" wire (circuit 29) from the Dash Harness and route the loose end of the wire to the Horn and cut to length.
If you have the original Horn, slide sleeve **"J"** onto the green wire and then crimp on ring terminal **"M"**. Slide sleeve **"J"** over ring terminal **"M"**. Connect to the Horn.
If you have a replacement Horn with a male blade terminal, crimp on terminal **"B"** to the green wire and plug into connector **"N"**. Connect to the Horn.

Wire #	Wire Color	Printing	Description
29	Dark Green	HORN	Feed to the Horn.

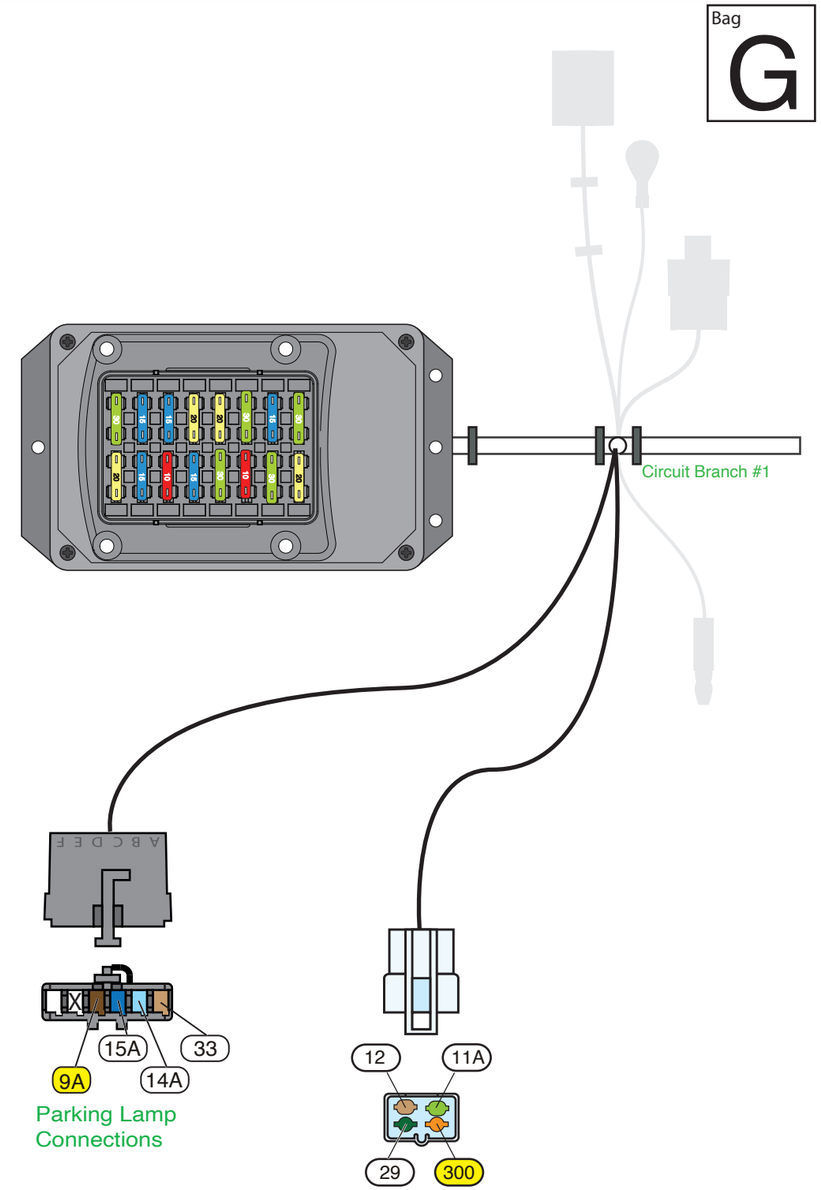

American Autowire
www.americanautowire.com 856-933-0801

1957-60 Ford Truck
Classic Update Series

510651 92973558 Rev 0.0 2/1/2022

Circuit Branch #2 Engine Compartment Connections (see Figures "B" and "C" on page 16). Plug the 510906 Engine Extension harnesses onto the dash at this location and bring the wires through the firewall as shown on page 16. See page 16, "Figure B" for typical connections. For loose piece terminals and connectors, see kit # 510656.

1. Brake Switch Connectors

Connect these two 1-way female bullet connectors to the Brake Switch (Stop Light Switch) which is located on the Brake Master Cylinder, **polarity doesn't matter**.

Wire #	Wire Color	Printing	Description
17A	White	BRAKE SW	Brake Switch feed to the Turn Signal Switch.
40B	Orange	BRAKE SW	12V Battery Fused feed from the Fuse Block.

2. VSS Connection: NOTE: These three wires are only used if you are using an Aftermarket Electric Speedometer. These wires and connector are for use with an aftermarket electric speedometer only. The VSS Lead Wires, 510730, bag V, will plug In here. Refer to that instruction sheet for wire functions and additional directions.

Wire #	Wire Color	Printing	Description
400	Yellow	VSS GROUND	Vehicle Speed Sensor Ground.
401	Purple	VSS SIGNAL	Vehicle Speed Sensor Signal.
402	Purple/White	VSS POWER	Vehicle Speed Sensor Power.

3. Washer Pump (if equipped). NOTE: This wire is only used if you have an Aftermarket Windshield Washer Pump.

Obtain the tan "no printing" wire (circuit 94) and route this wire to the Washer Pump, cut to length, crimp on terminal **"B"**, and plug into connector **"E"**. Now connect to the Washer Pump.

Wire #	Wire Color	Printing	Description
94	Tan	no printing	Feed to an Aftermarket Washer Pump.

ENGINE CONNECTIONS (Figure B)

4. Electric Choke. NOTE: This wire is only used if you have an Aftermarket Electric Choke.

Obtain the tan "ELECTRIC CHOKE" wire (circuit 39A) and route this wire to the Electric Choke and connect.

Wire #	Wire Color	Printing	Description
39A	Tan	ELECTRIC CHOKE	Feed to the Electric Choke.

5. Ignition Feed (see Figure "B" on page 16)

This pink "IGNITION FEED-COIL" wire (circuit 3A) is the 12V switched power source for the Distributor/Ignition Coil. This wire can be connected directly to the "Bat" terminal on a typical HEI Distributor, to a Ballast Resistor for a points type Distributor, or to be used as the ignition power source for an Aftermarket Ignition Module such as an MSD or a "Dura Spark" module. See the installation instructions for the type of Distributor/Ignition Module you are using for specific connection requirements.

If you are using a GM style HEI Distributor, terminal **"C"** and connector **"P"** have been provided to make that connection.

If you are using a Ballast Resistor **(Ballast Resistor not included in this kit)**, two **"C"** terminals, and two **"E"** connectors have been provided to make that connection.

Note: An optional Ballast Resistor is available from AAW under part number 500801.

Wire #	Wire Color	Printing	Description
3A	Pink	IGNITION FEED-COIL	Switched 12V Ignition feed for the ignition.

6. Engine Sensors

Route the dark blue "OIL PRESSURE SENDER" wire (circuit 31) to the Oil Pressure Sender, and the dark green "WATER TEMP SENDER" wire (circuit 35) to the Water Temperature Sender, cut to length, install terminals **"B"** or **"M"** (install sleeve **"J"** first if using **"M"**). If you are using terminal **"B"**, plug it into connector **"N"**.

Wire #	Wire Color	Printing	Description
31	Dark Blue	OIL PRESSURE SENDER	Oil Pressure Sender.
35	Dark Green	WATER TEMP SENDER	Water Temperature Sender.

Bag
G

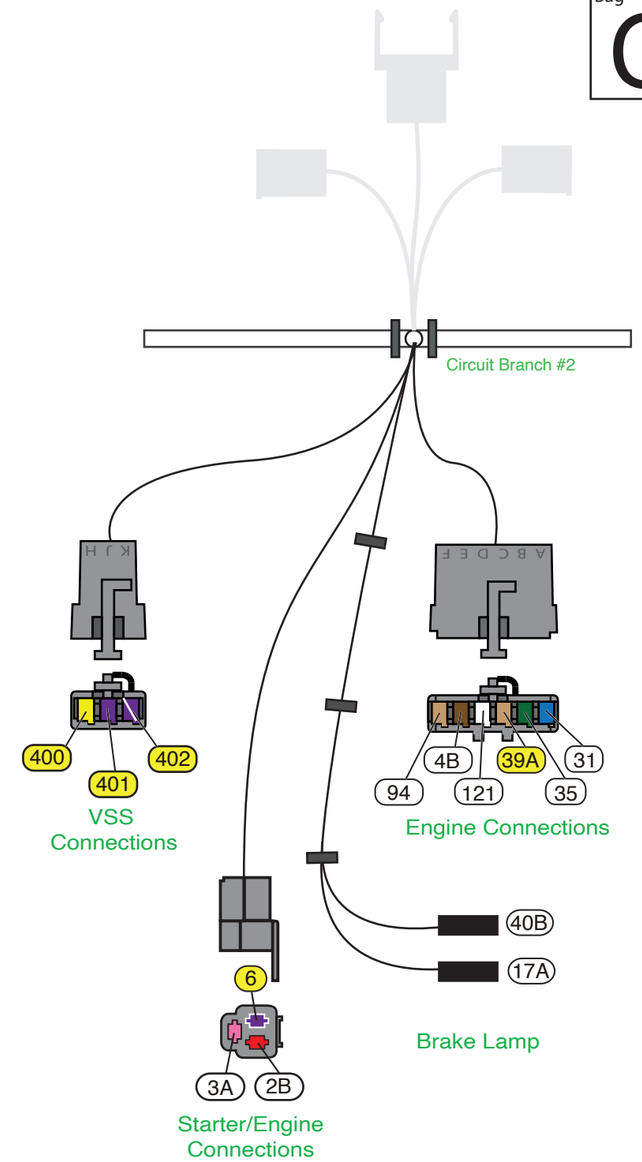

American Autowire
www.americanautowire.com 856-933-0801

1957-60 Ford Truck
Classic Update Series
510651 92973558 Rev 0.0 2/1/2022

Bag G

Circuit Branch #2 Engine Compartment Connections (continued)

7. Tachometer

NOTE: This wire is only used if you have an Aftermarket Tachometer.

Obtain the white "COIL->TACH" wire (circuit 121) and route and connect as follows:

If you have an Aftermarket Ignition Module such as an MSD Module, route the white wire to the module and connect to the Tachometer connection of the module.

If you are using a GM style HEI Distributor, terminal **"B"** and connector **"Q"** have been provided to make that connection.

If you have a points type Ignition System, route the white wire to the Ignition Coil and connect to the **(-)** terminal.

Wire #	Wire Color	Printing	Description
121	White	COIL->TACH	Tachometer feed wire.

STARTER SOLENOID CONNECTIONS (see Figure C on page 16 and Figure D on page 18)

8. Main Fuse Panel Feed

Route the red 12V Battery wire (circuit 2B) which is in the Dash Harness, to the Megafuses (see Figure D on page 18) and cut to length. Use ring terminal and shrink tubing from 510476 kit. Connect as shown on page 18.

Wire #	Wire Color	Printing	Description
2B	Red	12V BATTERY	Main Power feed to the Fuse Block.

9. Start Circuit Solenoid Wire

Route the purple "STARTER SOLENOID – S" wire (circuit 6) to the Starter Solenoid and cut to length, install sleeve **"D"** and crimp on ring terminal **"K"**. Connect to the Starter Solenoid S (start) stud.

Wire #	Wire Color	Printing	Description
6	Purple	STARTER SOLENOID-S	This is the start circuit.

10. Start Circuit Resistor Bypass Wire

NOTE: For Ignition Systems that have a Ballast Resistor in the Ignition feed to the Ignition Coil, this wire bypasses that resistor during Crank allowing a higher voltage.

Obtain the yellow **Starter Solenoid Resistor Bypass Wiring Jumper Harness "DD"** and attach the ring terminal to the **"I"** (ignition bypass) terminal of the Starter Solenoid. Route the other end of the yellow wire to the Ballast Resistor and cut to length. Obtain the cutoff section of the large pink wire (circuit 3A from step 5) and double it with the yellow wire, crimp on terminal **"C"** and insert into connector **"E"**. You can now connect to the Ballast Resistor. The other end of the large pink wire can be routed and connected to the **(+)** side of your Ignition Coil

Wire #	Wire Color	Printing	Description
7	Yellow	STARTER SOLENOID-R	Resistor Bypass wire.

"**DD**" Starter Solenoid Resistor Bypass Wiring

Alternator Connections (Figure C)

11. Alternator Output Circuit

Use the 6ga red wire, MegaFuse, boot, ring terminals, and shrink tube from the 510476 kit. Route from the MegaFuse to the alternator cut to length and apply ring terminals, shrink tube, boot then connect per the instructions in the 510476 Alternator and Main Power Connection kit.

Wire #	Wire Color	Printing	Description
2	Red	(no printing)	Alternator output wire.

12. Alternator Exciter Wire

NOTE: This brown wire is only used if you have an Aftermarket Alternator that requires an internal Voltage Regulator, and is the exciter wire for your Alternator/Voltage Regulator.

If you are using a 1-wire Alternator (recommended) this brown wire will not be used and should be **capped off** as it is "hot" when the Ignition Switch is in the "ON or ACC" position.

If not using a 1-wire Alternator, this brown "ALTERNATOR IGN" wire (circuit 4B) in your Dash Harness must be connected to the "Switched or 12V Ignition" terminal on your Voltage Regulator or Alternator according to the manufacturers specifications. An **inline diode or resistor may be necessary** to eliminate "run on" after being switched off. AAW recommends a Ford Gen 3 Internally Regulated or a 1-wire Alternator.

If you are using a GM "SI" Alternator obtain the **GM "SI" Alternator Exciter Wiring Jumper Harness "EE"**. Attach the ring terminal end of the **"EE"** jumper to the Battery stud of the Alternator. Route the brown wire (circuit 4B) from the Dash Harness to the 2-way connector of the jumper harness **"EE"**. Crimp on terminal **"B"** to the brown wire and plug into the open cavity of the 2-way connector of the Jumper Harness **"EE"**. Now plug the 2-way connector of the **"EE"** jumper harness into the "SI" Alternator.

Wire #	Wire Color	Printing	Description
2F	Red	no printing	Alternator Battery stud wire in the GM "SI" Alternator Exciter Wiring Jumper Harness.
4B	Brown	ALTERNATOR IGN	Alternator exciter wire.

"**EE**" GM "SI" Alternator Exciter Wiring

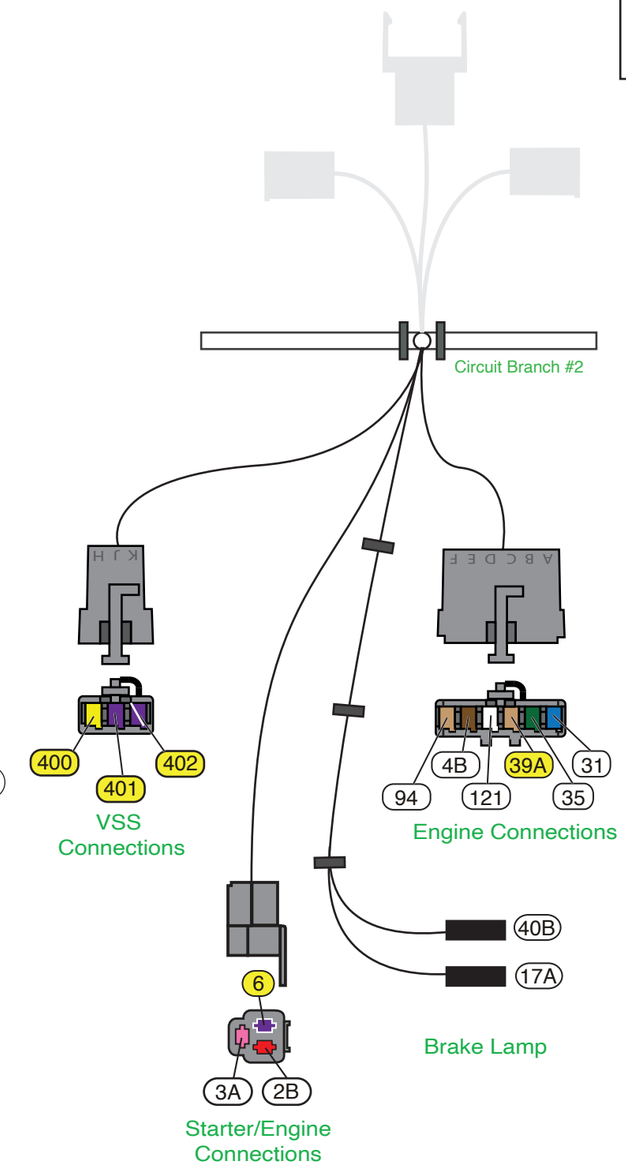

American Autowire

www.americanautowire.com 856-933-0801

1957-60 Ford Truck

Classic Update Series

510651 92973558 Rev 0.0 2/1/2022

Bag **G**

Circuit Branch #1 – Under Dash Connections

1. Accessory Connector

Use the provided 6-way empty connector, which is attached to the 6-way Accessory connector on the Dash Harness, and terminals **"B"** and **"C"** to add power wires (not provided) for the following optional systems:

Wire #	Wire Color	Printing	Fuse #	Fuse Block Cover	Fuse rating	Description
100	Orange	no printing	7	Hazard	15A	Battery feed for Hazard or Audio Systems.
103	Tan	FUEL PUMP	10	Fuel Pump	20A	Ignition feed for an Electric Fuel Pump.
104	Orange	POWER SEATS	2	Pwr Seats	30A	Battery feed for Power Seats.
105	Red	POWER LOCKS	8	Pwr Locks	20A	Battery feed for Power Locks.
106	Pink	POWER WINDOWS	15	Pwr Window	30A	Accessory feed for Power Windows.
107	Orange	12V BATTERY FUSED	1	Bat-Spare	30A	Battery feed for options.

2. Ground

Attach this black "GROUND" wire (circuit 150) to a good body ground.

Note: Do not attach this ground wire (circuit 150) with the ground wire (circuit 151) in Circuit Branch #4, they should remain separated.

Wire #	Wire Color	Printing	Description
150	Black	GROUND	Ground wire.

3. Dimmer Switch Connector

Route to the Dimmer Switch 500042 (located in **Bag G**). Attach the 3-way Dimmer Switch connector to the Dimmer Switch and attach to the Floor Pan.

Wire #	Wire Color	Printing	Description
10	Yellow	DIMMER SW FEED	Feed from the Headlight Switch.
11A	Light Green	HEADLIGHT-HI BEAM	Feed to the High Beam Headlights.
11B	Light Green	HI BEAM INDICATOR LIGHT	Feed to the High Beam Indicator Light in the Instrument Cluster.
12	Tan	HEADLIGHT-LOW BEAM	Feed to the Low Beam Headlights.

Circuit Branch #2 – Under Dash Connections

1. Turn Flasher Connector

Plug one of the Flashers into this connector.

Wire #	Wire Color	Printing	Description
16A	Purple	TURN SWITCH FEED	12V Ignition feed from the Fuse Block.
16B	Purple	TURN SWITCH FEED	12V feed from the Turn Flasher to the Turn Signal Switch.

2. Horn Relay Connector

Plug the Horn Relay into this connector.

Wire #	Wire Color	Printing	Description
2C	Red	12V BATTERY	Fused 12V Battery feed to the Horn Relay.
28	Black	HORN RELAY GROUND	Relay ground circuit to the Turn Signal Switch for Aftermarket Steering Columns.
28A	Black	HORN RELAY GROUND	Relay ground circuit to the base of the Steering Column for the Horn Switch.
29	Dark Green	HORN	Feed to the Horns.

3. Hazard Flasher Connector

Plug one of the Flashers into this connector (only used with an aftermarket steering column 4-way Hazard Flasher).

Wire #	Wire Color	Printing	Description
27A	Brown	TURN SW-HAZARD	12V Battery feed to the Hazard Flasher.
27B	Brown	TURN SW-HAZARD	12V feed from the Hazard Flasher to the Turn Signal Switch.

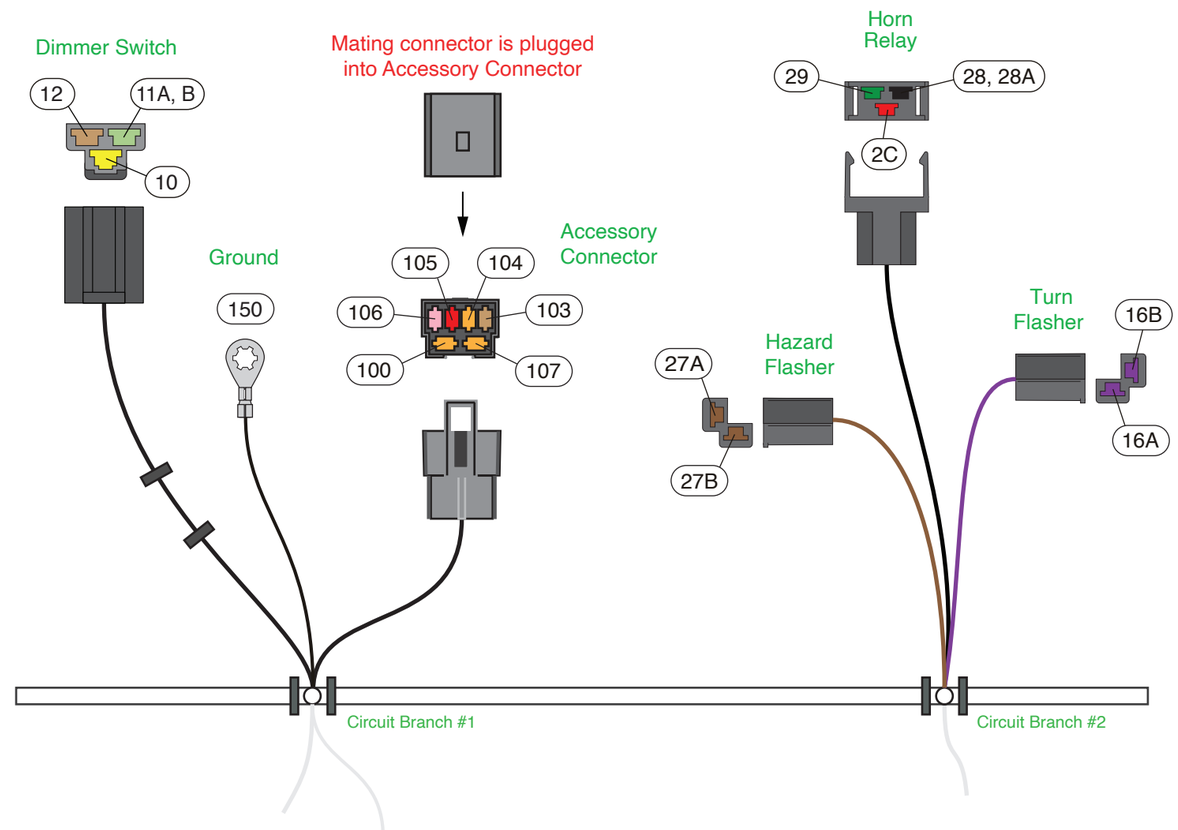

American Autowire
www.americanautowire.com 856-933-0801

1957-60 Ford Truck
Classic Update Series

Bag G

Circuit Branch #3 – Under Dash Connections

1. Headlight Switch Connector

Plug this connector to the **Headlight Switch 510254**.

Note: If you purchase an Aftermarket Retaining Nut to hold your Headlight Switch to the Dash, some Retaining Nuts have a plastic insert inside that may interfere with the installation of your new Headlight Switch Knob and Shaft. If there is interference, it is recommended that you remove this plastic insert from inside your Retaining Nut.

Wire #	Wire Color	Printing	Description
2A	Red	12V BATTERY	12V Battery feed from the Fuse Block.
8	Gray	DASH LIGHTS	Dash Light feed to the Cluster.
9A	Brown	PARK LIGHTS	Feed to the Front Park Lights.
9B	Brown	REAR RUNNING LIGHTS	Feed to the Rear Tail Lights and the License Light.
10	Yellow	DIMMER SW FEED	Feed to the Headlight Dimmer Switch for the Headlights.
40C	Orange	12V BATTERY-FUSED	Fused 12V Battery feed from the Fuse Block.
40D	Orange	12V BATTERY-FUSED	Fused 12V Battery feed to the LH Door Jamb Switch.
53A	Light Blue	12V CTSY SW	12V Switched feed to the LH Courtesy Light.
53B	Light Blue	12V CTSY SW	12V Switched feed to the RH Courtesy Light.
53F	Light Blue	12V CTSY SW	12V Switched feed from the LH Door Jamb Switch to the Headlight Switch.

2. Wiper Switch Connectors with the original Wiper Switch

Obtain the white **Wiper Switch Jumper Wire "HH"** and connect this jumper wire to the Wiper Switch Conn #2 in the Dash Harness. Connect the bullet terminal of this jumper to the **B** terminal on the Wiper Switch. Connect the three wires from the Wiper Motor to the Wiper Switch. The 4 wires at the Wiper Switch should be connected as follows:

Terminal on Switch	Wire Color
B	White (AAW)
F	Green (from Wiper Motor)
P	Black (from Wiper Motor)
A	Red (from Wiper Motor)

Wire #	Wire Color	Printing	Description
93X	White	WIPER FEED	Fused 12V Accessory feed to the Wiper Switch.

3. Wiper Switch Connectors with an Aftermarket Wiper System

Most Aftermarket Wiper Systems are self contained and only need a 12V feed wire to the Wiper Switch and a separate wire from the Wiper Switch to an Electric Washer Pump. We have provided both wires in the Dash Harness.

Wiper Switch Connector #1

This is the 1-way black connector in the Dash Harness that will connect to an Aftermarket Wiper Switch to provide the feed to a Washer Pump.

Wire #	Wire Color	Printing	Description
94	Tan	no printing	12V feed from the Wiper Switch to an Aftermarket Washer Pump.

Wiper Switch Connector #2

Plug this 1-way black connector to the aftermarket Wiper Switch. This is the main 12V power feed for the Wiper System.

Wire #	Wire Color	Printing	Description
93	White	WIPER FEED	Fused 12V Accessory feed from the Fuse Block to the Wiper Switch.

4. Left Hand Door Jamb Switch Connectors

Route the two male bullet connectors into the Side Cowl and through the Door Jamb Switch Hole (requires a .80" to .85" dia mounting hole, if not already present) and connect to the Door Jamb Switch **"Y"**. **Polarity does not matter.** You can now install the Door Jamb Switch. **Note: If you decide not to include a Door Jamb Switch, these two bullet terminals should be taped up separately and then taped back to the Dash Harness.**

Wire #	Wire Color	Printing	Description
40D	Orange	12V BATTERY-FUSED	12V fused Battery feed.
53F	Light Blue	12V CTSY SW	Feed to the LH Courtesy Light.

5. Left Hand Courtesy Light

Plug the 2-way Left Hand Courtesy Light Connector, which is part of the Dash Harness, into one of the **Under Dash Courtesy Light Wiring Jumper Harnesses "FF"**. Attach the Jumper Harness **"FF"** to the LH lower Outboard IP. **NOTE: This Courtesy Light utilizes a #631 Bulb (which is not included in this kit)**.

Wire #	Wire Color	Printing	Description
53A, C	Light Blue	12V CTSY SW	12V Switched feed to the LH Courtesy Light.
156A	White	CTSY GROUND	LH Courtesy Light ground. Attach this ring terminal to a good ground.

6. Rear Body Connector

This 9-way connector will plug into the 9-way connector of the Rear Body Harness Kit **510654** (kit located in **Bag M**). Some of the Rear Body Harness Kit wires will route through Grommet **"F"**, and then down the Firewall and to the rear of the vehicle along the LH Frame Rail. See the Rear Body Harness Kit for more details.

Wire #	Wire Color	Printing	Description
9B	Brown	REAR RUNNING LIGHTS	Feed for the License Light and the Rear Running Lights.
17B	Light Blue	THIRD BRAKE LIGHT	Feed for an aftermarket Third Brake Light.
18	Yellow	LEFT REAR TURN	Feed to the Left Rear Stop and Turn Light.
19	Dark Green	RIGHT REAR TURN	Feed to the Right Rear Stop and Turn Light.
24	Light Green	BACK UP LT SW ® LIGHTS	Feed from the Backup Light Switch to the Backup Lights if so equipped.
30	Tan	GAS GAUGE	Fuel Tank Sender.
40A, E	Orange	12V BATTERY-FUSED	12V Fused Battery feed for Aftermarket LED Tail Lights.
53C	Light Blue	12V CTSY SW	12V Switched feed for the Dome Light and any Interior Courtesy Lights.

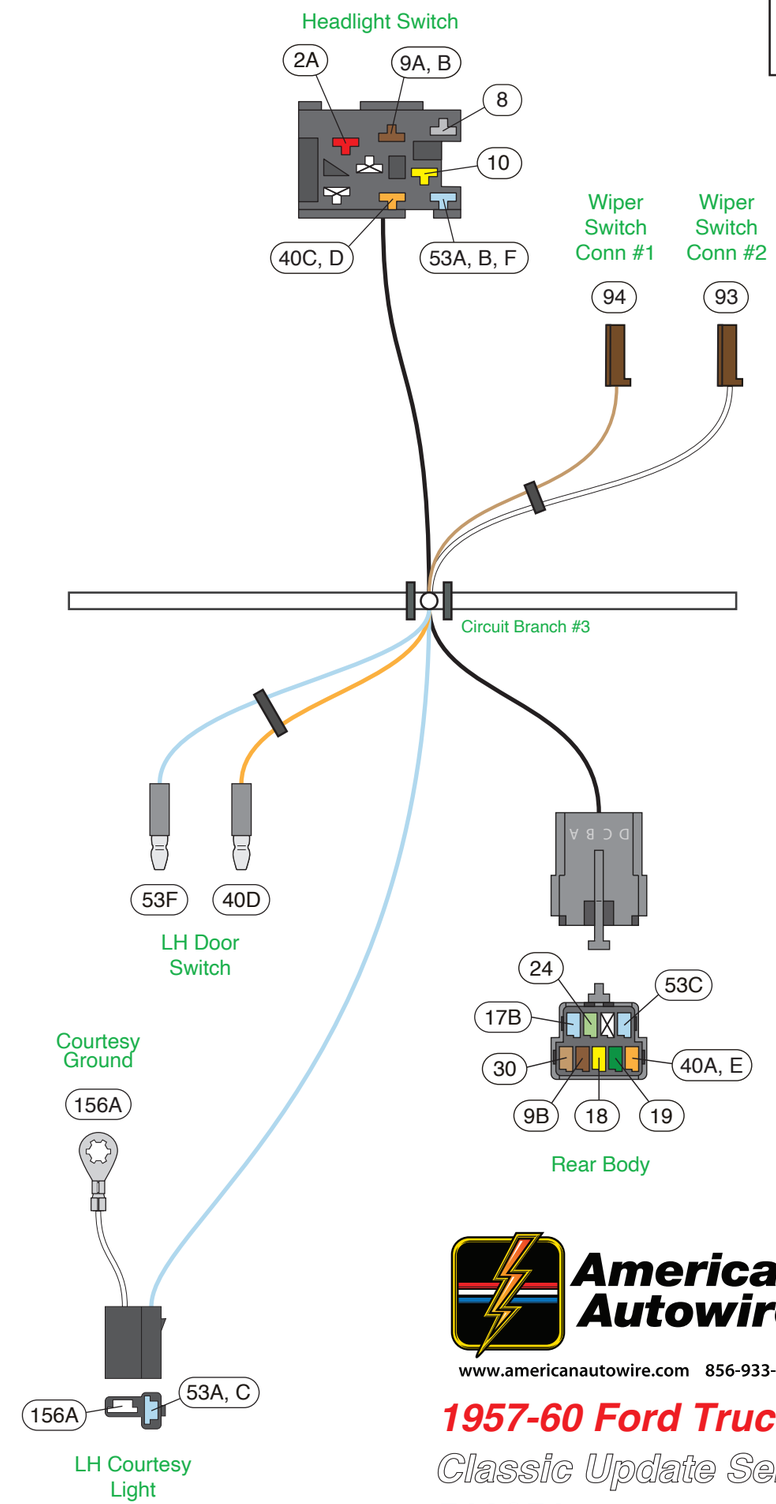

American Autowire

www.americanautowire.com 856-933-0801

1957-60 Ford Truck

Classic Update Series

510651 92973558 Rev 0.0 2/1/2022

Circuit Branch #4 – Under Dash Connections

Instrument Cluster Connections

These connectors will plug to the connectors of the Gauge Cluster Kit **510653** (located in **Bag H**).

1. Cluster Connector "A"

Wire #	Wire Color	Printing	Description
4C	Brown	ALTERNATOR IGN	12V Ignition Accessory feed.
8, 8A	Gray	DASH LIGHTS	Headlight feed for the Cluster Illumination Lights.
39B, C	Pink	12V IGNITION	12V Fused Ignition feed.
150	Black	GROUND	Cluster ground.

2. Cluster Connector "B"

Wire #	Wire Color	Printing	Description
11B	Light Green	HI BEAM INDICATOR LIGHT	Feed to the High Beam Indicator Light.
14B	Light Blue	LEFT DASH IND	Feed for the Left Turn Signal Indicator Light.
15B	Dark Blue	RIGHT DASH IND	Feed for the Right Turn Signal Indicator Light.
30	Tan	GAS GAUGE	Fuel Gauge Signal from the Fuel Tank Sending Unit.
31	Dark Blue	OIL PRESSURE SENDER	Oil Pressure Sender Signal from the Engine.
33	Tan	BRAKE LIGHT/SWITCH	Brake Warning Light Signal to ground.
35	Dark Green	WATER TEMP SENDER	Water Temperature Sender Signal from the Engine.
121	White	COIL-->TACH	Tachometer feed to the Ignition Coil.

3. Cluster Connector "C"

This connector contains the wires for an Aftermarket Electric Speedometer. **NOTE: Wires "400" and "401" must remain twisted together**.

Wire #	Wire Color	Printing	Description
139	Pink/White	SPEEDO POWER	Fused 12V Ignition feed for the Electric Speedometer.
151	Black/White	SPEEDO GROUND	Electric Speedometer Ground.
400	Yellow	VSS GROUND	Vehicle Speed Sensor Ground.
401	Purple	VSS SIGNAL	Vehicle Speed Sensor Signal.
402	Purple/White	VSS POWER	Vehicle Speed Sensor Power.

Ignition Switch Connectors

4. Ignition Switch Connections

Attach each of the ring terminals to the appropriate stud on the **Ignition Switch Assembly 510655** as noted below.

Wire #	Wire Color	Printing	Description
2D	Red	12V BATTERY	12V Battery feed. Attach to the "BAT" stud of the Ignition Switch.
3B	Pink	IGNITION FEED	12V Ignition feed from the Ignition Switch. Attach to the "IGN" stud of the Ignition Switch.
4A	Brown	IGNITION SW ACCY	12V Accessory feed from the Ignition Switch. Attach to the "ACC" stud on the Ignition Switch.
4C	Brown	ALTERNATOR IGN	Same as 4A.
5	Purple	NEUTRAL SAFETY SWITCH	Start feed to the Neutral Safety Switch or to the purple Starter Solenoid wire (circuit 6). Attach to the **"ST"** stud of the Ignition Switch.

Note: Your Ignition Switch Assembly does not include a Bezel and you will have to use your original or purchase one from an Aftermarket Supplier.

5. Cigarette Lighter Connector

Connect the Cigar Lighter female bullet connector to the Cigar Lighter.

Wire #	Wire Color	Printing	Description
40	Orange	12V BATTERY-FUSED	Fused 12V Battery feed to the Cigar Lighter.

6. Dash Light Candelabra

This 3-way female bullet connector provides a connection point for any Illumination Light feed that may be required, such as to the Radio, the Ash Tray Light, the Clock, the Heater Switch or any Aftermarket Gauges. This is the same circuit as the Instrument Cluster Illumination Lights and will dim when the Headlight Dimmer Switch Knob is rotated clockwise. Extra wire length of the gray "DASH LIGHTS" wire (circuit 8) is available in the Cluster Kit **510653** in **Bag H**. Also, large male bullet terminals **"A"** and large sleeves **"D"** (to plug into the Candelabra Connector) are available for this application.

Wire #	Wire Color	Printing	Description
8A	Gray	DASH LIGHTS	Dash Lights feed wire.

7. Aftermarket Electric Speedo Ground

Attach this wire to a good body ground.

Note: Do not attach this ground wire (circuit 151) with the ground wire (circuit 150) in Circuit Branch #1, they should remain separated.

Wire #	Wire Color	Printing	Description
151	Black/White	SPEEDO GROUND	Ground for an Aftermarket Electric Speedometer.

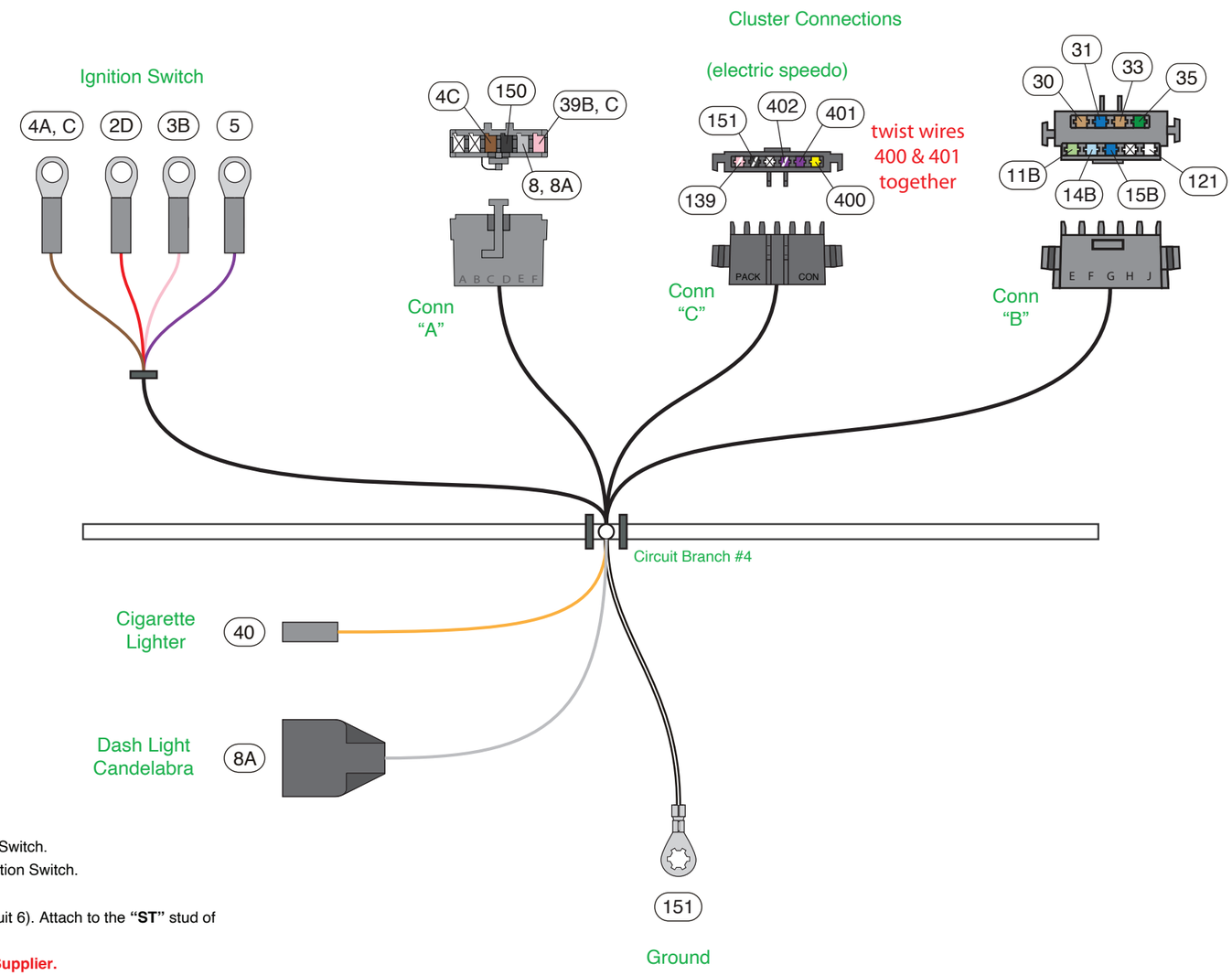

Bag G

American Autowire

www.americanautowire.com 856-933-0801

1957-60 Ford Truck

Classic Update Series

510651 92973558 Rev 0.0 2/1/2022

Bag G

Circuit Branch #5 – Under Dash Connections

The Backup and Neutral Safety Switch Wires

NOTE: These wires are coiled up.

For both a Manual transmission and an Automatic Transmission, route the light green Backup Light/Switch wire (circuit 24) and the pink 12 Volt Ignition wire (circuit 39C) to the Backup Light Switch and connect. Polarity doesn't matter.

If you have a Manual Transmission, you will need to connect the purple Neutral Safety Switch wire (circuit 5) and the purple Starter Solenoid wire (circuit 6) together.

If you have an Automatic Transmission, route the purple Neutral Safety Switch wire (circuit 5) and the purple Starter Solenoid wire (circuit 6) to the Neutral Safety Switch and connect. A typical connection for the Neutral Safety/Backup Switch can be found on **page 17 Figure "D"**.

NOTE: If circuit 5 and circuit 6 are not connected, your Starter Solenoid will not engage, and your Engine will not crank.

1. Backup and Neutral Safety Switch Connections

Wire #	Wire Color	Printing	Description
5	Purple	NEUTRAL SAFETY SWITCH	Start feed from the Ignition Switch to the Neutral Safety switch or to circuit 6.
6	Purple	STARTER SOLENOID-S	Start circuit from the Neutral Safety Switch or circuit 5 to the Starter Solenoid.
24	Light Green	BACK UP LT SW->LIGHTS	Feed from the Backup Light Switch to the Backup Lights.
39C	Pink	12V IGNITION	12V feed to the Backup Light Switch.

Turn Signal Switch Preparation

For all of the vehicles, the Turn Signal Switch is mounted to the Steering Column. You can continue to use this original Turn Signal Switch or you can replace it with an Aftermarket Turn Signal Switch.

If you are using the original Turn Signal Switch (or an Aftermarket Turn Signal Switch) you will have to remove the original connector (and terminals) and replace them with the 14-way connector **"BBB"**, and terminals **"AAA"** (see Dash Harness Loose Piece Kit **92973542** for parts). Cut the original connector from the pigtail as close as possible to the original connector allowing maximum wire length, crimp on terminals **"AAA"** and plug into connector **"BBB"** (see **Diagram 'A'** and **"Table A"** on **page 14** for wire location and functional description of the circuits).

If you are using an Aftermarket Steering Column it may have the proper 14-way Pack con connector already attached to the Turn Signal Switch Pigtail. If so, you can plug the Dash Harness 11-way connector directly into the Turn Signal Switch. If not, then add terminals **"AAA"** and connector **"BBB"** to the Turn Signal Switch.

2. Turn Signal Switch Connector

Once you have modified the Turn Signal Switch Pigtail by adding the black 14-way male connector, plug the 11-way Turn Signal Switch Connector, which is part of the Dash Harness, to the 14-way connector of the Turn Signal Switch.

Wire #	Wire Color	Printing	Description
14A,	Light Blue	LEFT FRONT TURN	Left Front Turn Signal feed.
14B	Light Blue	LEFT DASH IND	Feed to the LH Turn Signal Indicator.
15A,	Dark Blue	RIGHT FRONT TURN	Right Front Turn Signal feed.
15B	Dark Blue	RIGHT DASH IND	Feed to the RH Turn Signal Indicator.
16B	Purple	TURN SWITCH FEED	Turn Signal Switch feed from the Turn Signal Flasher.
17A	White	BRAKE SW	Brake Switch feed to the Turn Signal Switch.
17B	Light Blue	THIRD BRAKE LIGHT	Feed to the Third Brake Light.
18	Yellow	LEFT REAR TURN	Feed to the Left Rear Turn Signal Light.
19	Dark Green	RIGHT REAR TURN	Feed to the Right Rear Turn Signal Light.
27B	Brown	TURN SW – HAZARD	Feed from the Hazard Flasher.
28	Black	HORN RELAY GROUND	Ground from the Horn Relay to the Horn Switch.

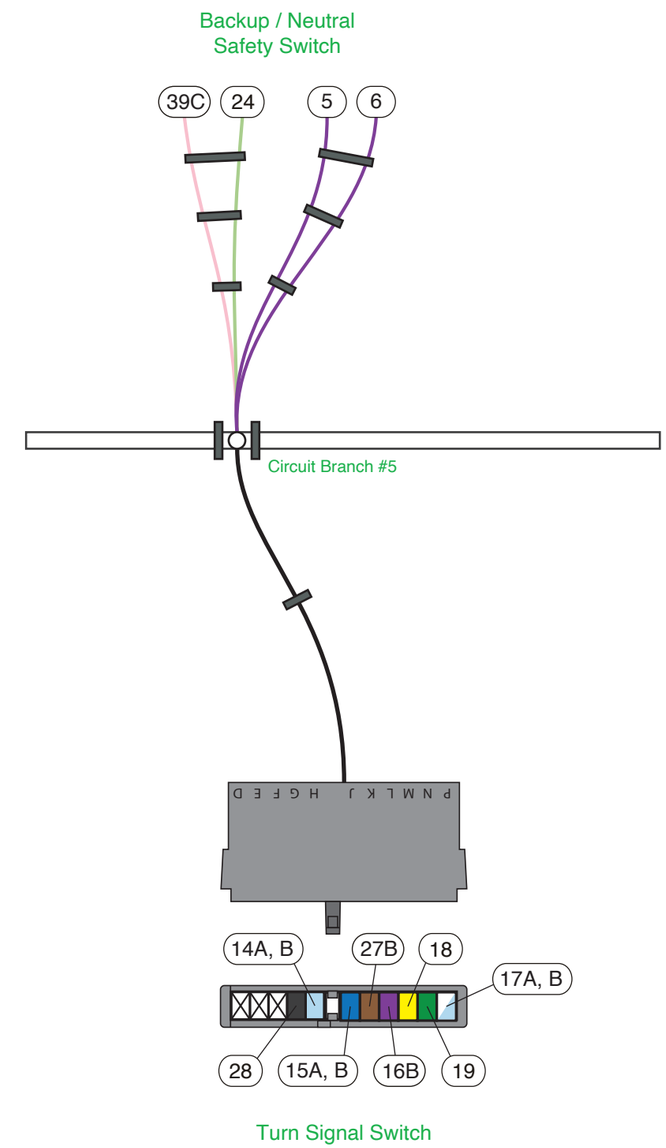

American Autowire

www.americanautowire.com 856-933-0801

1957-60 Ford Truck

Classic Update Series

510651 92973558 Rev 0.0 2/1/2022

Bag

G

"GG" Heater Switch to Blower Motor, Standard Heater

Circuit Branch #6 – Under Dash Connections

Heater Systems (see Figures "E" and "F" on page 17)

This kit provides wiring for two different Heater Systems (Standard and Deluxe).

Heater Switch Feed Wire

The same Heater Switch is used for both systems. The terminals on the Heater Switch are identified as **B** = 12V feed, **H** = High Speed, and **L** = Low Speed. Connect the brown wire (circuit 50) from the Dash Harness to the **B** terminal of your Heater Switch.

Wire #	Wire Color	Printing	Description
50	Brown	HEATER/AC FEED	12V fused B+ feed from the Fuse Block.

1. The Standard Heater System (see Figure "E")

Connect the **Heater Switch to Blower Motor, Standard Heater "GG"** Jumper Harness, to the Heater Switch and to the Blower Motor as shown in **Figure "E" on page 17.**

Wire #	Wire Color	Printing	Description
51X	Red	no printing	Heater Switch to Blower Motor Low Speed.
52X	Orange	no printing	Heater Switch to Blower Motor High Speed.

2. The Deluxe Heater System (see Figure "F")

Connect the **Heater Switch to Blower Motor, Deluxe Heater "JJ"** Jumper Harness to the Heater Switch, the Blower Motor Resistor, and to the Blower Motor as shown in **Figure "F" on page 17.**

Wire #	Wire Color	Printing	Description
51Y	Red	no printing	Heater Switch Low Speed to Blower Motor Resistor.
52Y	Orange	no printing	Heater Switch High Speed to Blower Motor Resistor.
52Z	Orange	no printing	Voltage feed from Blower Motor Resistor to Blower Motor.

NOTE: Terminals H and M, and sleeves J, have been provided if you need to replace the original terminals on the Blower Motor pigtail wires. Make sure the black wire from your Blower Motor is connected to a good vehicle ground.

Circuit Branch #7 – Under Dash Connections

1. Radio/Clock Wires

These wires are provided for your Radio/Clock.

Wire #	Wire Color	Printing	Description
43	Tan	RADIO	12V Fused Accessory Feed to the Radio for "On/Off" power.
99	Yellow	CLOCK BAT	12V Fused Battery Feed for a Clock or for Radio Memory.

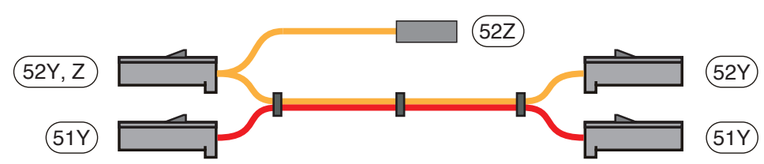

"JJ" Heater Switch to Blower Motor, Deluxe Heater

Circuit Branch #8 – Under Dash Connections

1. Glove Compartment Light Connector

Plug the orange female bullet Glove Box Light connector to the Glove Box Switch/Light Pigtail.

Wire #	Wire Color	Printing	Description
40E, F	Orange	12V BATTERY – FUSED	12V Battery feed to the Glove Compartment Light.

2. Right Hand Courtesy Light

Plug the 2-way Right Hand Courtesy Light Connector, which is part of the Dash Harness, into one of the **Under Dash Courtesy Light Jumper Harnesses "FF"**. Attach the Jumper Harness **"FF"** to the RH lower Outboard IP. **NOTE: This Courtesy Light utilizes a #631 Bulb (which is not included in this kit)**.

Wire #	Wire Color	Printing	Description
53B, G	Light Blue	12V CTSY SW	12V Switched feed to the RH Courtesy Light.
156B	White	CTSY GROUND	RH Courtesy Light ground. Attach this ring terminal to a good ground.

3. Right Hand Door Jamb Switch Connectors

Route the two male bullet connectors into the Side Cowl and through the Door Jamb Switch Hole (requires a .80" to .85" dia mounting hole, if not already present) and connect to the Door Jamb Switch **"Y"**. **Polarity does not matter**. You can now install the Door Jamb Switch. **Note: If you decide not to include a Door Jamb Switch, these two bullet terminals should be taped up separately and then taped back to the Dash Harness.**

Wire #	Wire Color	Printing	Description
40F	Orange	12V BATTERY-FUSED	12V fused Battery feed.
53G	Light Blue	12V CTSY SW	Feed to the RH Courtesy Light.

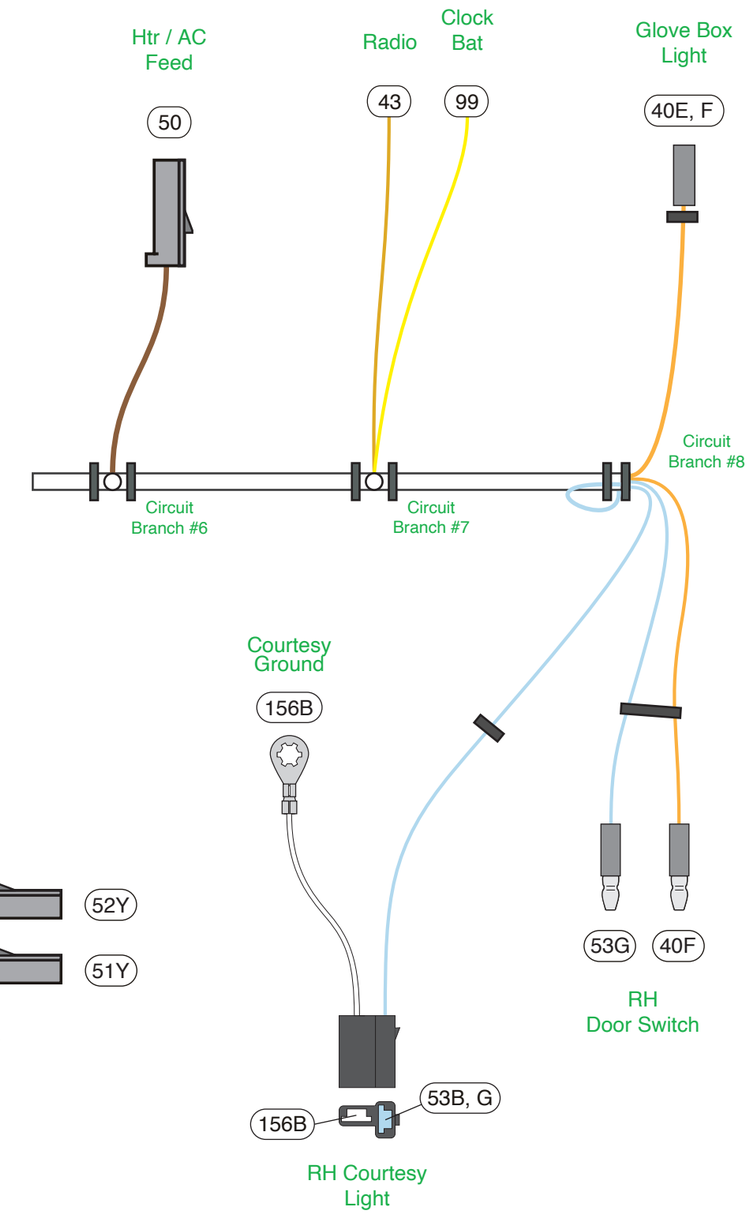

American Autowire

www.americanautowire.com 856-933-0801

1957-60 Ford Truck

Classic Update Series

510651 92973558 Rev 0.0 2/1/2022

Bag G

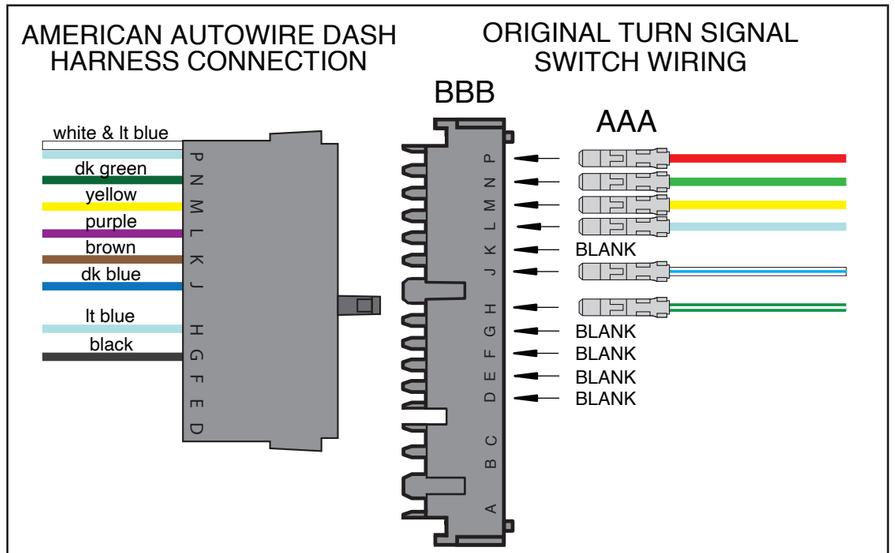

DIAGRAM 'A' - AAW Turn Signal Switch Wires to Stock 1957-60 Steering Columns.

"Table A"

AAW Turn Signal Switch wires to stock 1957-60 Ford Truck

AAW Wire #	AAW Wire Color	AAW Wire Printing	Connector Cavity	Ford Wire Color
17A,B	White & Light Blue	Brake SW & Third Brake Light	P	Red
19	Dark Green	Right Rear Turn	N	Green
18	Yellow	Left Rear Turn	M	Yellow
16B	Purple	Turn Switch Feed	L	Light Blue
27B	Brown	Turn SW - Hazard	K	None
15A,B	Dark Blue	Right Front Turn & Right Dash Indicator	J	White with Blue Stripe
14A,B	Light Blue	Left Front Turn & Left Dash Indicator	H	Green with White Stripe
28	Black	Horn Relay Ground	G	None
None	None	None	F	None
None	None	None	E	None
None	None	None	D	None

NOTE: For all of the vehicles, the Steering Column Horn Button switches ground for a Horn Relay, which then switches power to the Horns, similar to the AAW design. Wire 27B is being provided if an Emergency Warning Flasher System is to be added. Wire 28 is being provided if an aftermarket steering column has horn switch ground provisions in the steering column.

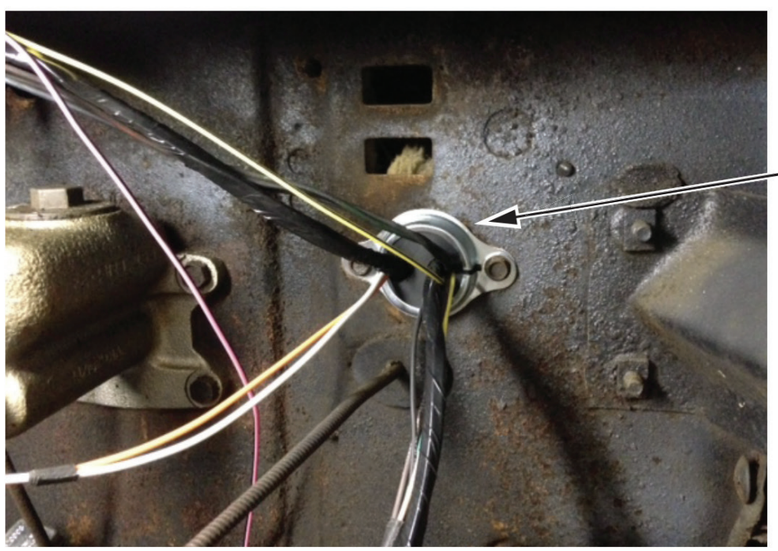

Firewall grommet "**F**" and metal retainer
(metal retainer is not included in this kit)

Photo is of a 1960 F-100 Custom Cab

Figure "H"

American Autowire
www.americanautowire.com 856-933-0801

1957-60 Ford Truck
Classic Update Series

510651 92973558 Rev 0.0 2/1/2022

Bag **G**

Figure "A"

Front lights, horn, electric fan and brake warning switch.
These wires are all found at pages 2 & 5, Branch 1.

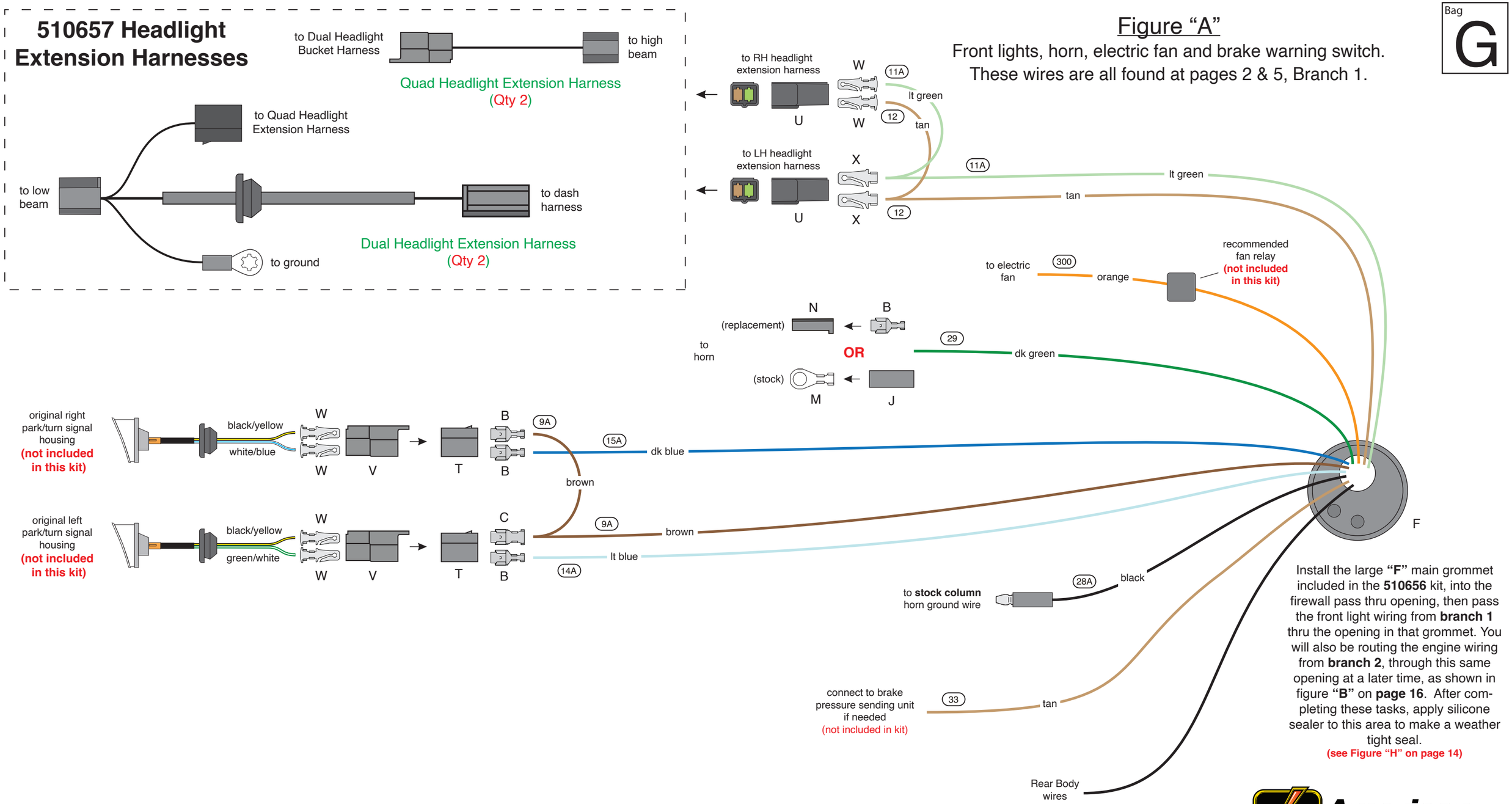

Install the large **"F"** main grommet included in the **510656** kit, into the firewall pass thru opening, then pass the front light wiring from **branch 1** thru the opening in that grommet. You will also be routing the engine wiring from **branch 2**, through this same opening at a later time, as shown in figure **"B"** on **page 16**. After completing these tasks, apply silicone sealer to this area to make a weather tight seal.
(see Figure "H" on page 14)

NOTE: The terminals and connectors listed on this page and denoted with **UPPER CASE LETTERS**, to help you complete the various connections to your lights, horns, brake warning switch, and electric fan, can be found in your loose piece, clamp, grommet and parts kit, P/N **510656**.

The identifications, colors, and functions, for all of the wires listed in Figure **"A"**, on this page, can be found on pages **2 & 5**, branch **1**, of this main instruction set.

American Autowire
www.americanautowire.com 856-933-0801

1957-60 Ford Truck
Classic Update Series

510651 92973558 Rev 0.0 2/1/2022

Bag

G

Figure "C"
Main Power and Alternator Wiring

Figure "B"
Ignition, engine sensors, electric choke, washer pump, tach, electric speedometer and brake switch

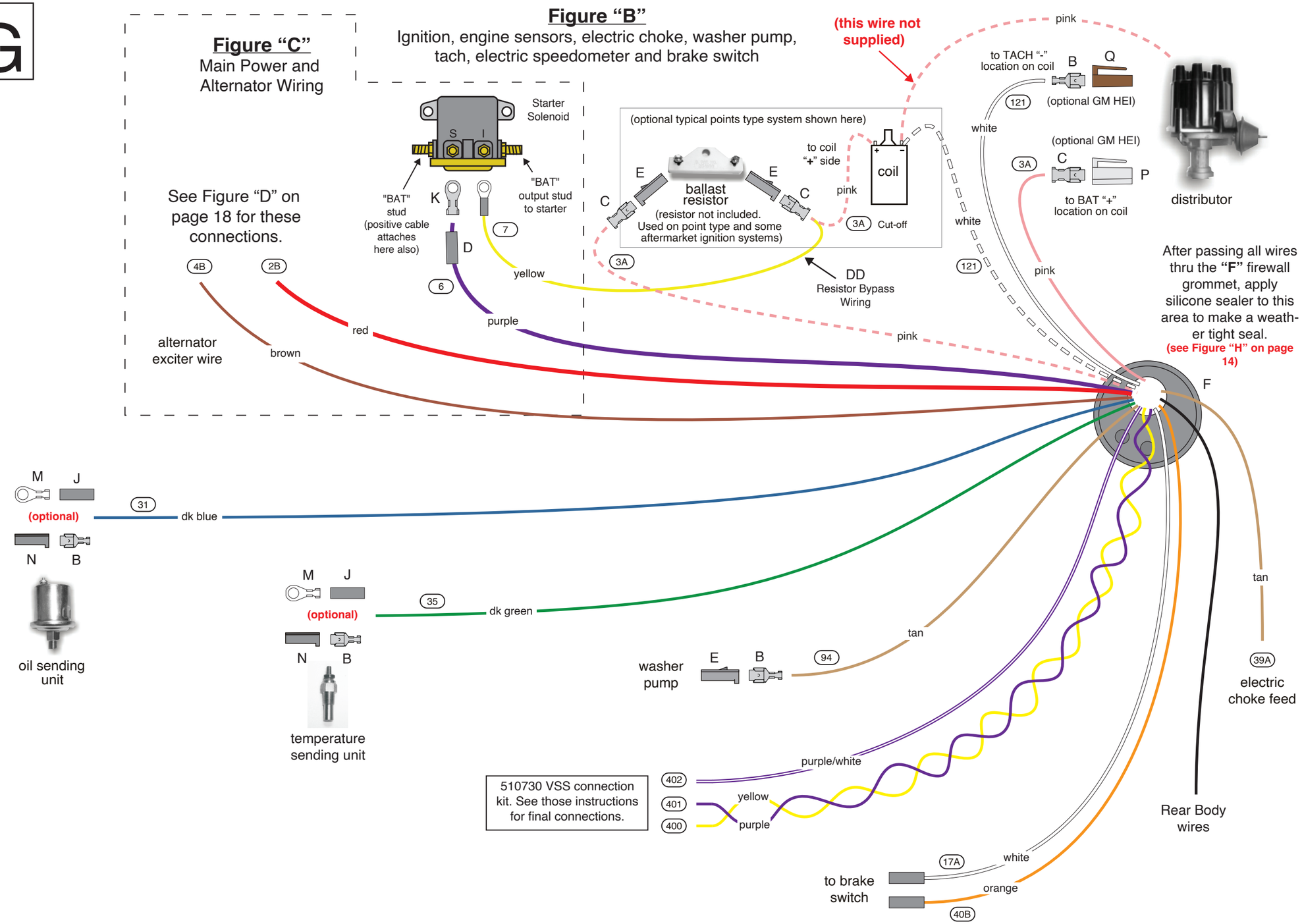

NOTE: The terminals and connectors listed on this page and denoted with **UPPER CASE LETTERS,** to help you complete the various connections to your ignition feed, engine sensors, electric choke, tachometer, washer pump, brake switch, electric speedometer, and alternator output, can be found in your loose piece, clamp, grommet and parts kit, P/N **510656**.

The identifications, colors, and functions, for all of the wires listed in Figure **"B"** and Figure **"C"**, on this page, can be found on pages 7 and 8, branch **2**, of this instruction set.

AAW kits are all engineered to be used in conjunction with a high output, later model internally regulated, or one wire alternators. We do not suggest or support the use of a stock, low amperage generator or alternator, as they do not supply sufficient current to recharge the battery in a highly modified truck such as this kit was designed for. AAW suggests a Ford Gen III (3G), a GM "SI", or a 1 wire type alternator as good choices to use. An adpater to complete the connection to the Ford Gen III (3G) style alternator (AAW p/n 500802) may be purchased separately. Contact AAW for your needs.

American Autowire

www.americanautowire.com 856-933-0801

1957-60 Ford Truck

Classic Update Series

510651 92973558 Rev 0.0 2/1/2022

Bag G

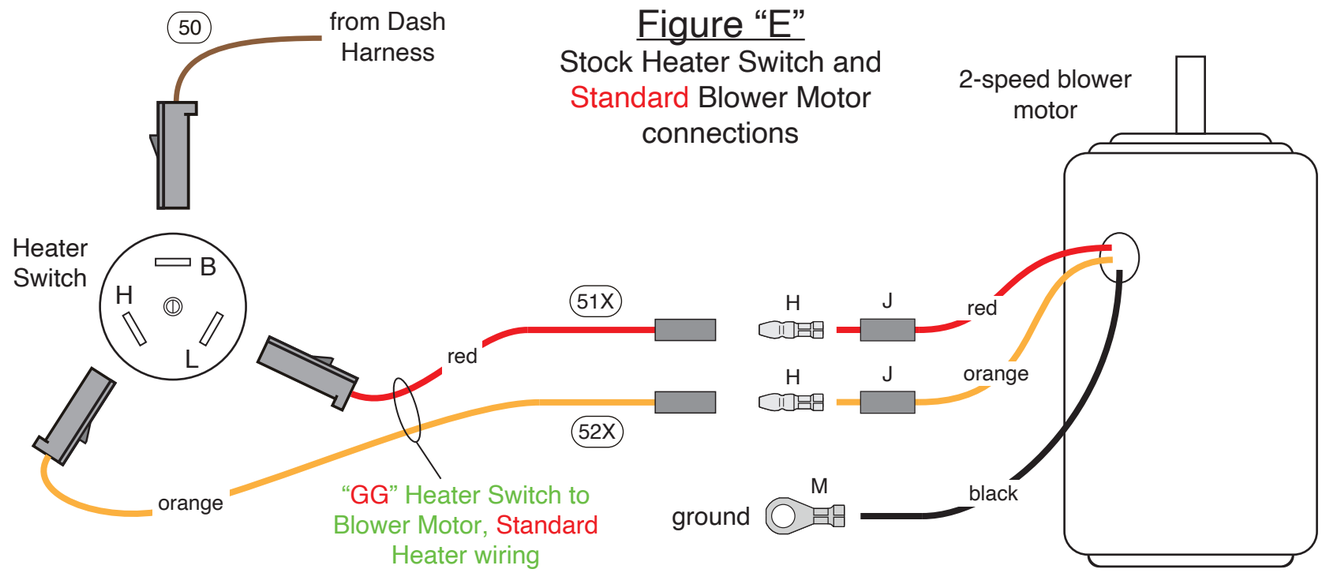

Figure "E"
Stock Heater Switch and Standard Blower Motor connections

This AAW kit is engineered to work with most aftermarket manufacturer's heating and air conditioning systems. As such, we have provided a keyed 12-volt feed to use as the "OFF / ON" (AAW brown 50 wire) power source for whatever system you choose to purchase. The manufacturer will supply you with a harness for their system and instructions on how to connect it. In the event you are utilizing a stock heater system in your truck, we have also provided wires that will run from your heater switch to your heater motor. See Figure **"E"** above for complete installation instructions.

Figure "D"
Shown is a typical NSS and Backup Switch.

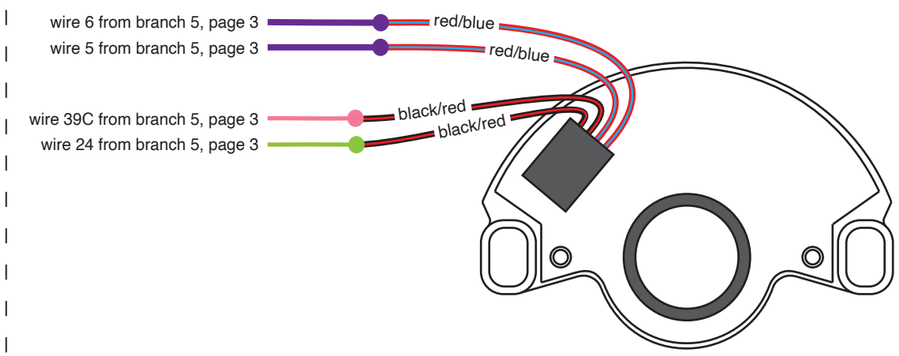

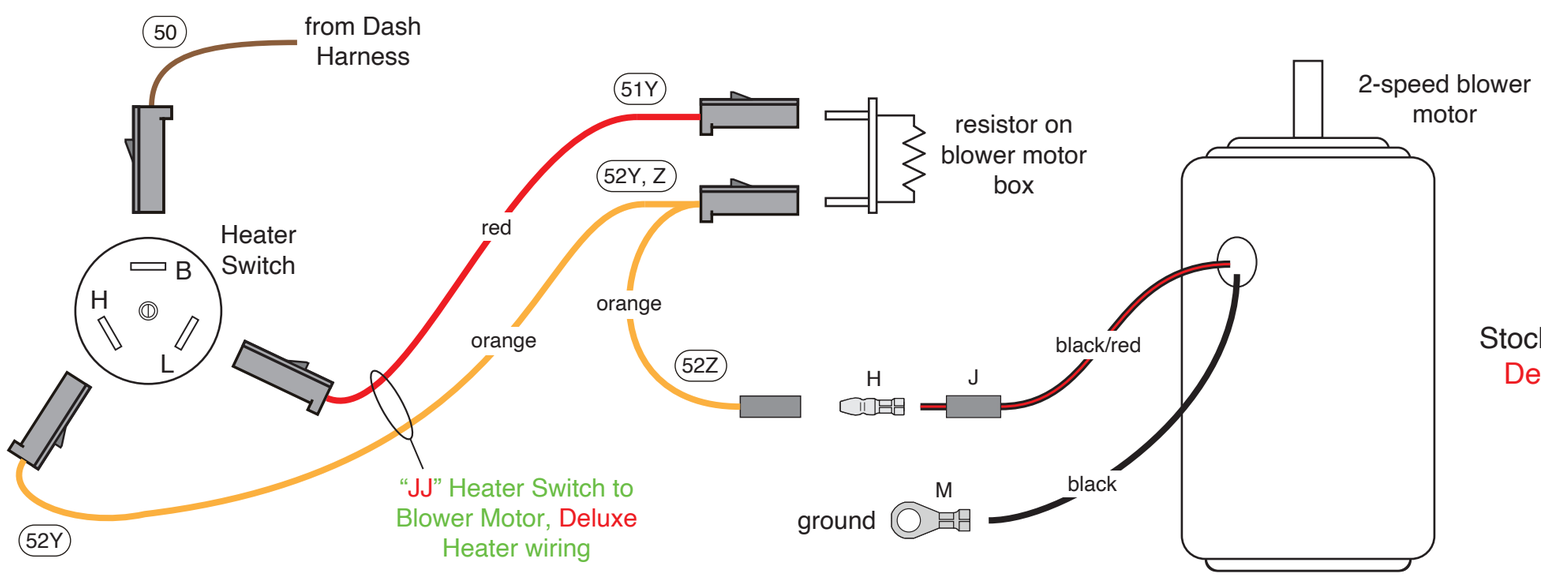

Figure "F"
Stock Heater Switch and Deluxe Blower Motor connections

This AAW kit is engineered to work with most aftermarket manufacturer's heating and air conditioning systems. As such, we have provided a keyed 12-volt feed to use as the "OFF / ON" (AAW brown 50 wire) power source for whatever system you choose to purchase. The manufacturer will supply you with a harness for their system and instructions on how to connect it. In the event you are utilizing a stock heater system in your truck, we have also provided wires that will run from your heater switch to your heater motor. See Figure **"F"** above for complete installation instructions.

American Autowire
www.americanautowire.com 856-933-0801
1957-60 Ford Truck
Classic Update Series
510651 92973558 Rev 0.0 2/1/2022

Bag

G

FUSE LOCATIONS

NOTE: This is an image of the completed Fuse Block assembly, depicting the proper location for the installation of each fuse.

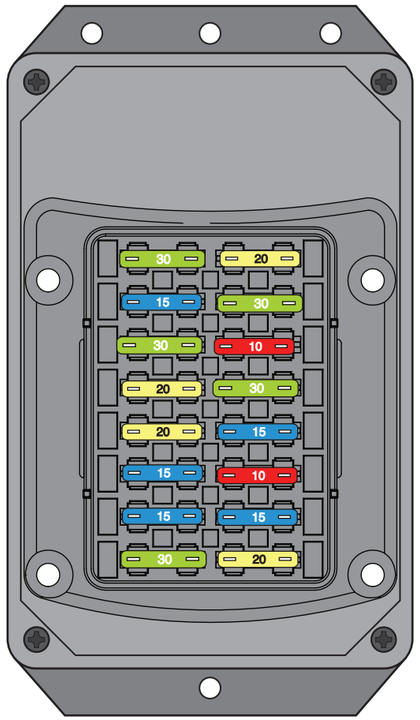

Batt - Spare 30A - BAT	1	9	Wiper 20A - ACC
Clock/Radio 15A - BAT	2	10	Heat/AC 30A - ACC
Power Seat 30A - BAT	3	11	Radio 10A - ACC
Cigar - Lighter 20A - BAT	4	12	Engine Fan 30A - ACC
Power Locks 20A - BAT	5	13	Turn 15A - IGN
Stop/Courtesy 15A - BAT	6	14	Gauges, B/U 10A - IGN
Hazard 15A - BAT	7	15	Elec. Choke 15A - IGN
Pwr. Window 30A - IGN	8	16	Fuel Pump 20A - IGN

Fuse label on inside of Fuse Block cover

Figure "G"

Fuse #	Fuse Block Cover Label	Fuse Rating	Description
1	Bat-Spare	30A	Battery feed for Headlight relays.
2	Clock - Bat	15A	Battery feed for a Clock and a Radio.
3	Power Seats	30A	Battery feed for optional Power Seats.
4	Cigar Lighter	20A	Battery feed for the Cigarette Lighter.
5	Pwr Locks	15A	Battery feed to Power Locks. Fog sw.
6	Stop / Courtesy	15A	Battery feed for Brake Lights, Dash Lights, Courtesy and Dome Lights, to Rear Body Harness for options and the Glove Box Light.
7	Hazard	15A	Battery feed for optional Hazard Lights and optional battery feed.
8	Power Window	30A	Ignition feed for optional Power Windows.
9	Wiper	20A	12V Accessory feed for Wiper/Washer system.
10	Heat / AC	30A	12V Accessory feed for Heater/AC System.
11	Radio	10A	12V Accessory "on-off" feed to Radio.
12	Engine Fan	30A	12V Accessory for an optional Electric Fan System, Relay key-on trigger
13	Turn	15A	Ignition feed for the Turn Signals.
14	Gauges, B/U	10A	Ignition feed for Dash Gauges/Warning Lights and Back-up Lights.
15	Electric Choke	15A	Ignition feed for an Electric Choke,
16	Fuel Pump	20A	Ignition feed for an Electric Fuel Pump and optional Electronic Speedometer System.

Figure "D"

Main Power and Alternator Wiring

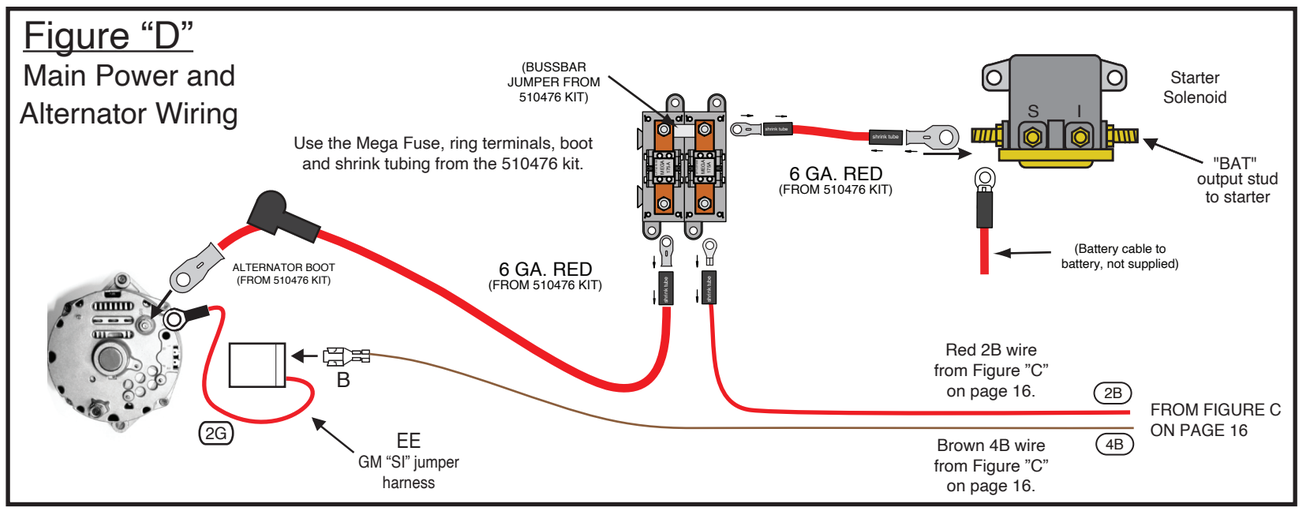

American Autowire

www.americanautowire.com 856-933-0801

1957-60 Ford Truck

Classic Update Series

510651 92973558 Rev 0.0 2/1/2022

Classic Update Series

"J" Clamps
One "J-Clamp" **(see page 2)** has been provided to retain the cluster kit wiring in place. Remove the original "J-Clamp" from the cluster and replace with the "J-Clamp" item **"T" (see photograph on page 6)**.

Splice Clips
Splice Clips **(item "U" on page 2)** have been provided for the circuit 8 and circuit 39 splices **(see page 3)**. Each splice clip can have a maximum of four 18 gauge wires in, and four 18 gauge wires out. Be sure to tape over each splice after splicing the circuits together.

Connector E – This connector will plug into the mating connector A of the dash harness. Connect the wires as follows:

Wire Color	Printing	Description

1. 12V Ignition Feed

Pink **12V IGNITION** This wire is used to provide ignition voltage to the oil pressure warning light **(see page 3)** or any aftermarket gauges or a brake warning light that you may add. Obtain the pink "12V IGNITION" wire (circuit 39) and route the wire to the oil pressure warning light, cut to length, slide on the **2-way** light socket **"G"** and spring **"J"** and crimp on terminal **"H"**.
If you are adding aftermarket gauges or a brake warning light, you will have to splice in sections of the same pink wire (use splice clip **"U"**) that you just cut **(see page 3)**. Route these pink wires and connect to all of the associated device(s).

2. Dash Illumination Lights

Gray **DASH LIGHTS** This wire will require an in-line splice of the wires (use splice clip **"U"**) to accommodate each of the two dash lights **(see page 3)**. Obtain the gray "DASH LIGHTS" wire (circuit 8) which is located in **connector "E"** and cut to length, splice in sections of the same gray wire that you just cut. Route these gray wires to the two dash light locations, cut each to length, slide on light socket **"M"**, and crimp on terminal **"H"**.

3. Ground

Black **GROUND** Obtain the black "GROUND" wire (circuit 150) which is located in **connector "E" (see page 3)**. Route this wire to the Constant Voltage Regulator (CVR) **(see photo on page 6)**, cut to length and crimp on ring terminal **"Q"**. Attach the ring terminal to the screw that attaches the CVR to the cluster housing. **Make sure that you have a good path to ground.**

4. 12V Accessory Feed to the CVR

Brown **no printing** Obtain the brown wire (circuit 4) which is located in **connector "E" (see page 3)**. Route this wire to the input side of the CVR, cut to length, install terminal **"O"** and plug into **connector "N"**, now connect to the CVR. Take the cut off portion of the wire and slide on sleeve **"P"**, then install terminal **"L"**, slide **"P"** over **"L"** and connect to the output side of the CVR. Route the other end of the wire to the temperature gauge, cut to length and install a ring terminal supplied from the **Gauge Terminal Kit 92965220**. Make a separate jumper wire using the ring terminals from the gauge terminal kit to supply power to the fuel gauge. Attach all of the ring terminals to the gauges with the included 10-32 locknuts.

Connector D – This connector will plug into the mating connector B of the dash harness. Connect the wires as follows:

Wire Color	Printing	Description

1. Left Turn Light

Light Blue **LEFT DASH IND** This wire is for your left turn signal indicator light. Obtain the light blue "LEFT DASH IND" wire (circuit 14) which is located in **connector "D" (see page 3)**, route to the left turn signal light, cut to length, slide on light socket **"M"**, and crimp on terminal **"H"**.

2. Right Turn Light

Dark Blue **RIGHT DASH IND** This wire is for your right turn signal indicator light. Obtain the dark blue "RIGHT DASH IND" wire (circuit 15) which is located in **connector "D" (see page 3)**, route to the right turn signal light, cut to length, slide on light socket **"M"**, and crimp on terminal **"H"**.

American Autowire
www.ameriacnautowire.com 856-933-0801

Classic Update Series
bag H
INSTRUMENT CLUSTER KIT
1957-60 Ford Truck
510653
92971645 Rev 0.0 8/31/2016

3. High Beam Indicator Light

Wire Color	Printing	Description
Light Green	**HI BEAM INDICATOR LIGHT**	This wire is for your high beam indicator light. Obtain the light green "HI BEAM INDICATOR LIGHT" wire (circuit 11) which is located in **connector "D" (see page 3)**, route to the high beam indicator light, cut to length, slide on light socket **"M"**, and crimp on terminal **"H"**.

4. Temperature Gauge

Dark Green	**WATER TEMP SENDER**	This wire is for your coolant temperature gauge. Obtain the dark green "WATER TEMP SENDER" wire (circuit 35) which is located in **connector "D" (see page 3)**, route to the coolant temperature gauge, cut to length, install a ring terminal from the gauge terminal kit, and attach to the coolant temperature gauge using a supplied 10-32 locknut. See the **photograph on page 6** for the location of the wires on the temperature gauge.

5. Fuel Gauge

Tan	**GAS GAUGE**	This wire is for your fuel gauge. Obtain the tan "GAS GAUGE" wire (circuit 30) which is located in **connector "D" (see page 3)**, route to the fuel gauge, cut to length, install a ring terminal from the gauge terminal kit, and attach to the fuel gauge using a supplied 10-32 locknut. See the **photograph on page 6** for the location of the wires on the fuel gauge.

6. Oil Pressure Warning Light

Dark Blue	**OIL PRESSURE SENDER**	This wire is for your oil pressure warning light. Obtain the dark blue "OIL PRESSURE SENDER" wire (circuit 31) which is located in **connector "D" (see page 3)**, route to the oil pressure warning light, cut to length, crimp on terminal **"K"** and insert into the 2-way light socket **"G"**.

7. Brake Warning Light

Tan	**BRAKE LIGHT/SWITCH**	This wire is only used with an aftermarket brake warning light. Obtain the loose tan "BRAKE LIGHT/SWITCH" wire (circuit 33) and plug it into **connector "D" (see page 3)**. Route the other end of this wire to the aftermarket brake warning light, cut to length and connect to the ground side of the brake warning light. When this wire goes to ground, the brake warning light will illuminate. Here are two possible ways that this wire can go to ground:

A. If you upgrade your brake system and add a brake pressure differential warning switch (see the dash harness sssembly instructions **92971610**). This wiring to the brake pressure differential warning switch is included in the dash harness.

B. If you splice in a cutoff portion of the tan wire "BRAKE LIGHT/SWITCH wire to this tan wire (circuit 33), and then connect the other end of the tan wire to an aftermarket park brake switch.

9. Tachometer

White	**COIL --> TACH**	This wire is only used with an aftermarket tachometer. Obtain the **loose** white "COIL --> TACH" wire (circuit 121) and plug it into **connector "D" (see page 3)**. Route the other end of this wire to the aftermarket tachometer, cut to length, and install onto your tachometer pulse location per the tachometer manufacturers recommendations.

Connector F – This connector will plug into the mating connector C of the dash harness, see page 5 for typical electric speedometer connections.

This connector is only used when using an aftermarket electric speedometer. Follow the manufacturer's instructions when installing these wires.

For typical aftermarket gauge connections, see page 4.

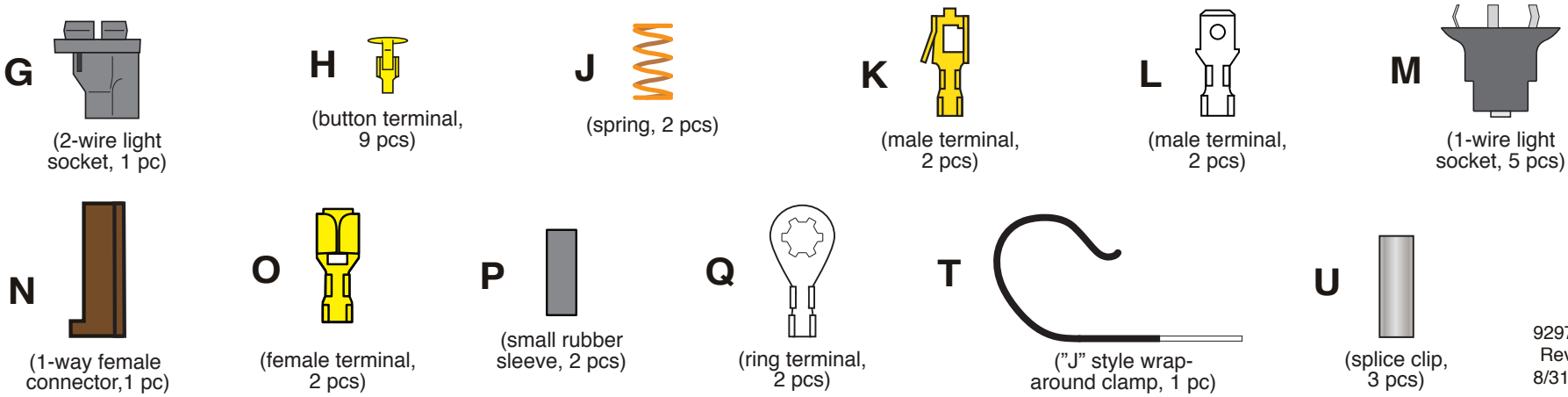

92971645
Rev 0.0
8/31/2016

Classic Update Series

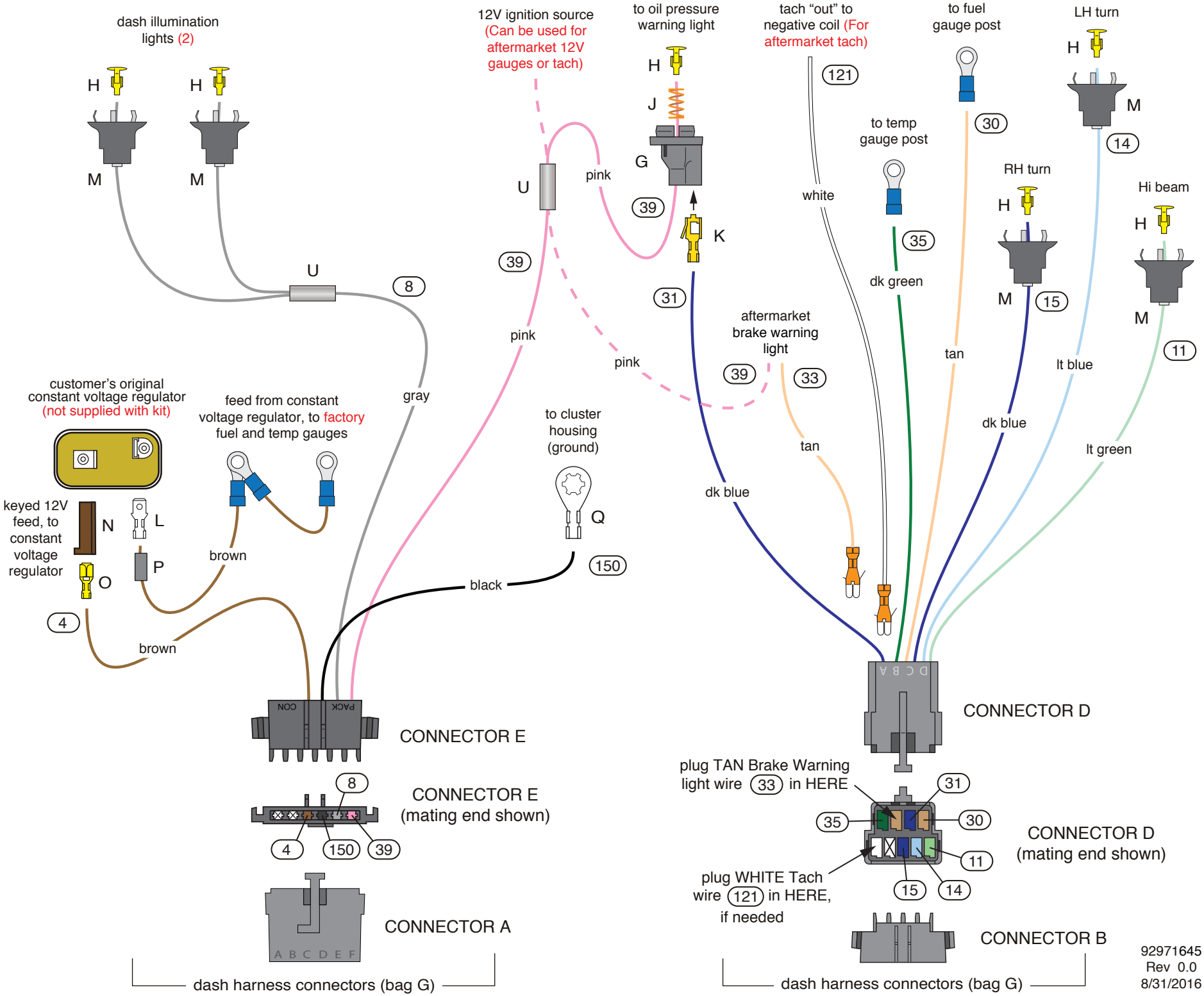

92971645
Rev 0.0
8/31/2016

TYPICAL AFTERMARKET GAUGE CONNECTIONS
(BLADE TYPE CONNECTIONS SHOWN)

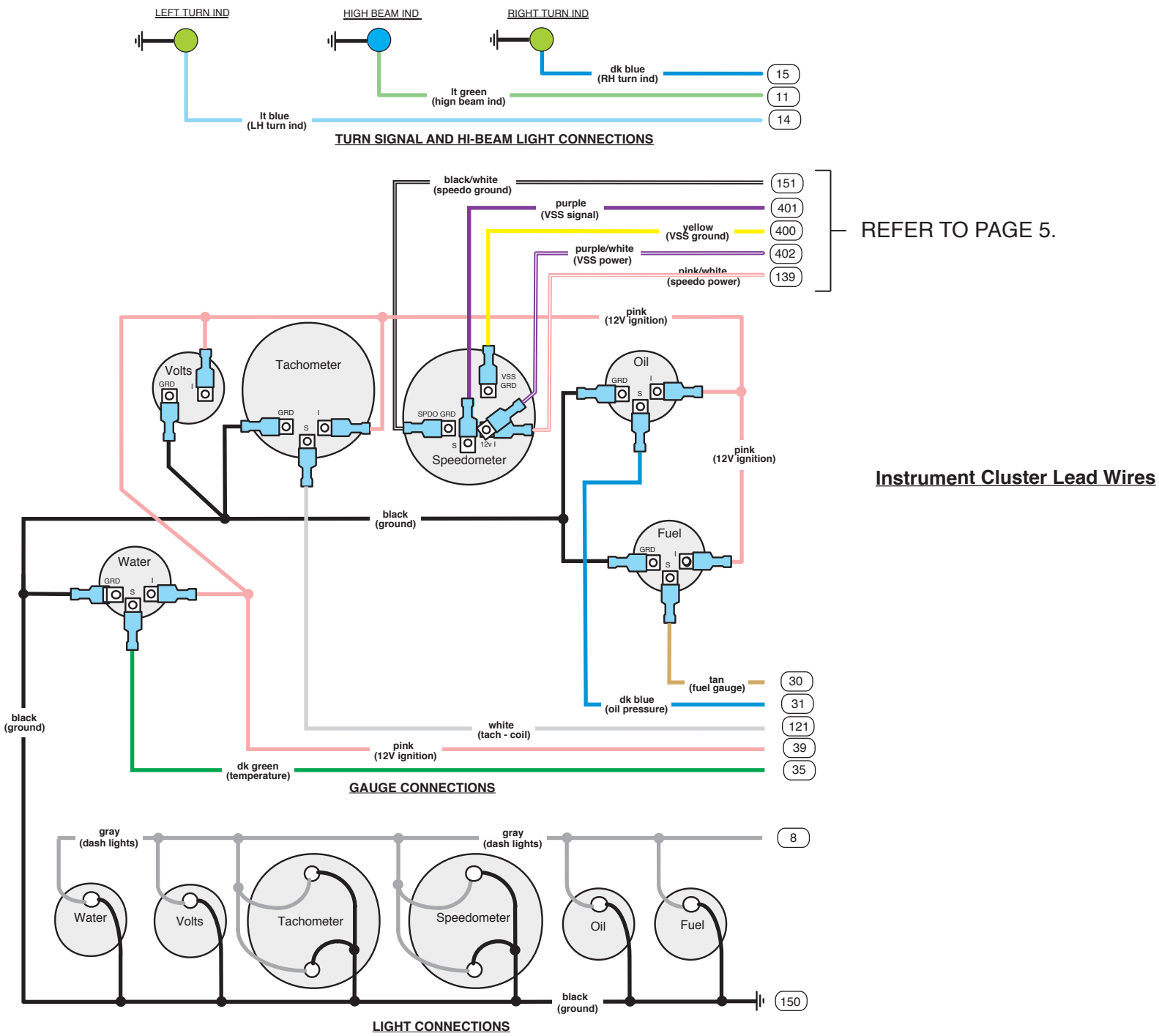

Instrument Cluster Lead Wires

92971645
Rev 0.0
8/31/2016

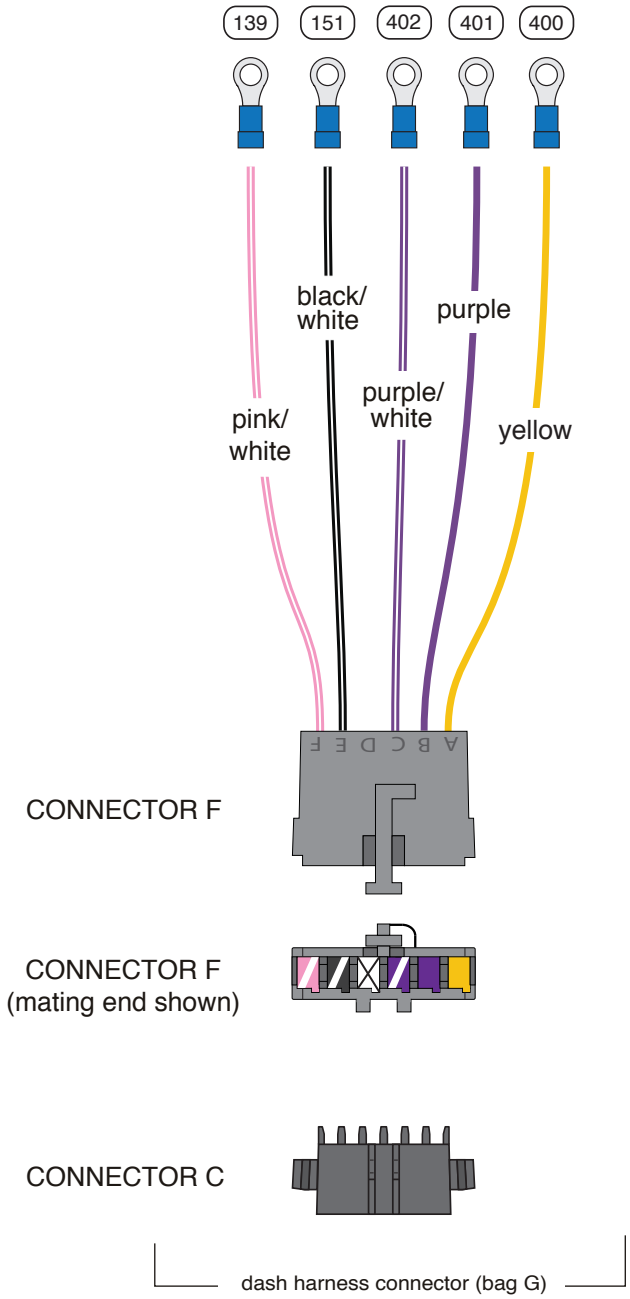

TYPICAL ELECTRIC SPEEDO CONNECTIONS

Below are some general instructions for hooking up an electric speedometer. This connector and these instructions will ONLY be used in the event that you are utilizing an aftermarket electric speedometer. If your car does NOT have an electric speedometer, this connection will NOT be used and should not be plugged onto your dash harness. It is best to consult the speedometer manufacturer's instructions if you have any questions.

Yellow	VSS Ground	Connect to VSS "-" on speedometer.
Purple	VSS Signal	Connect to VSS input on speedometer.
Purple/White	VSS Power	Connect to 12V power on speedometer.
Black/White	Speedo Ground	Connect to ground on speedometer.
Pink/White	Speedo Power	Connect to 12v power on speedometer. NOTE: This wire will double onto the same stud as the purple/white VSS power wire from above.

92971645
Rev 0.0
8/31/2016

Wiring-side view of Cluster Gauge Connections

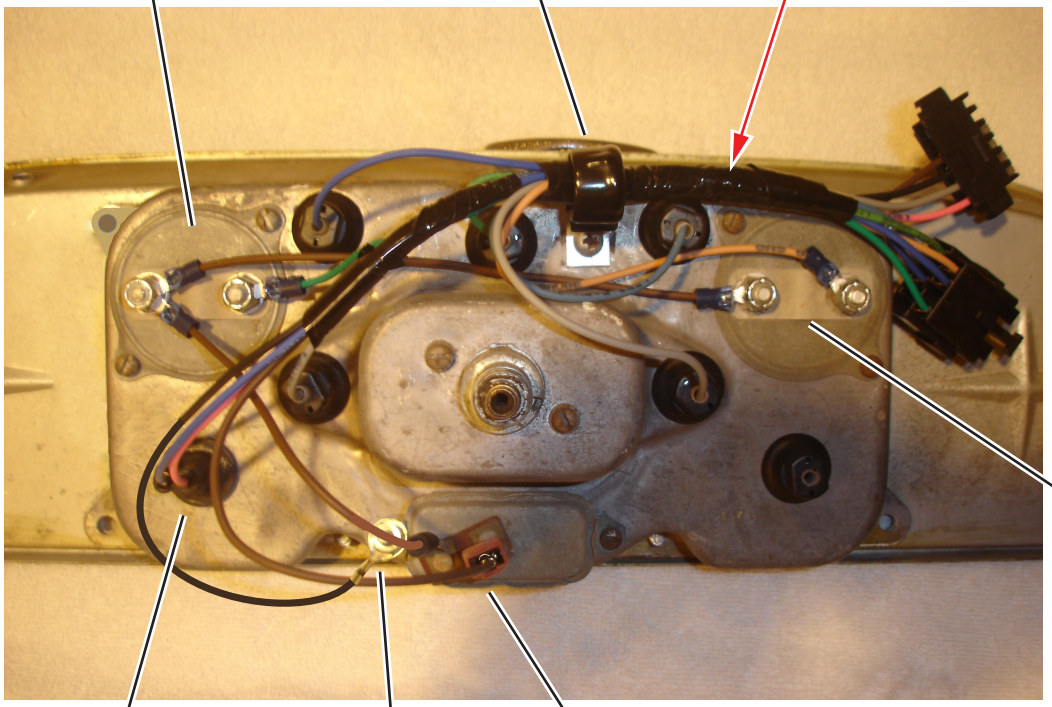

Photograph is of a typical 1957-60 Ford Truck instrument cluster; wiring-side

92971645
Rev 0.0
8/31/2016

Electric Speedo VSS extension connection:

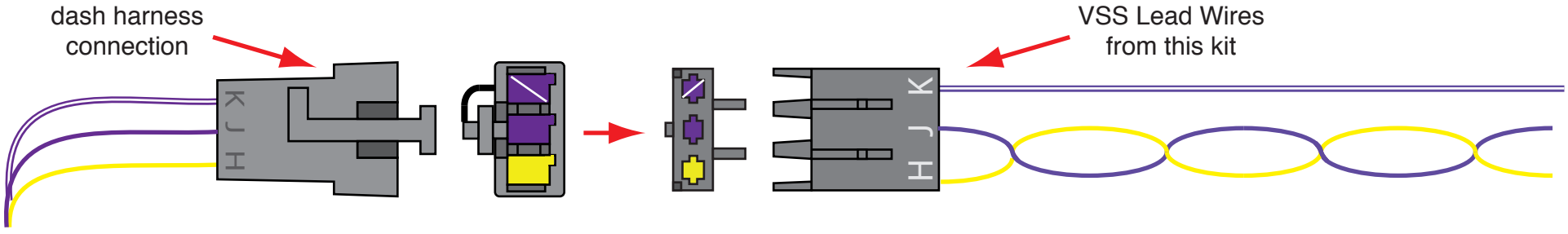

If you are using an aftermarket electric speedometer in your vehicle, you will need to connect the vehicle speed sensor (VSS) Lead Wires from this kit to the dash side connection of your dash harness. The yellow and solid purple wires must remain twisted together as shown above. These three wires will need to pass through the firewall or floor of your vehicle down to the vehicle speed sensor unit in the transmission. Generally, the solid purple wire connects to the “signal” lead, the yellow wire connects to the “ground” lead, and the purple/white stripe wire connects to the “12 volt power” lead on the vehicle speed sensor assembly. However, you should consult the directions that came with your gauges, and connect your vehicle speed sensor per the manufacturer’s instructions.

American Autowire
www.americanautowire.com 856-933-0801

bag V

VSS LEAD WIRES

Various Applications

Classic Update Series

510730

92972371 Rev 0.0 4/9/2019

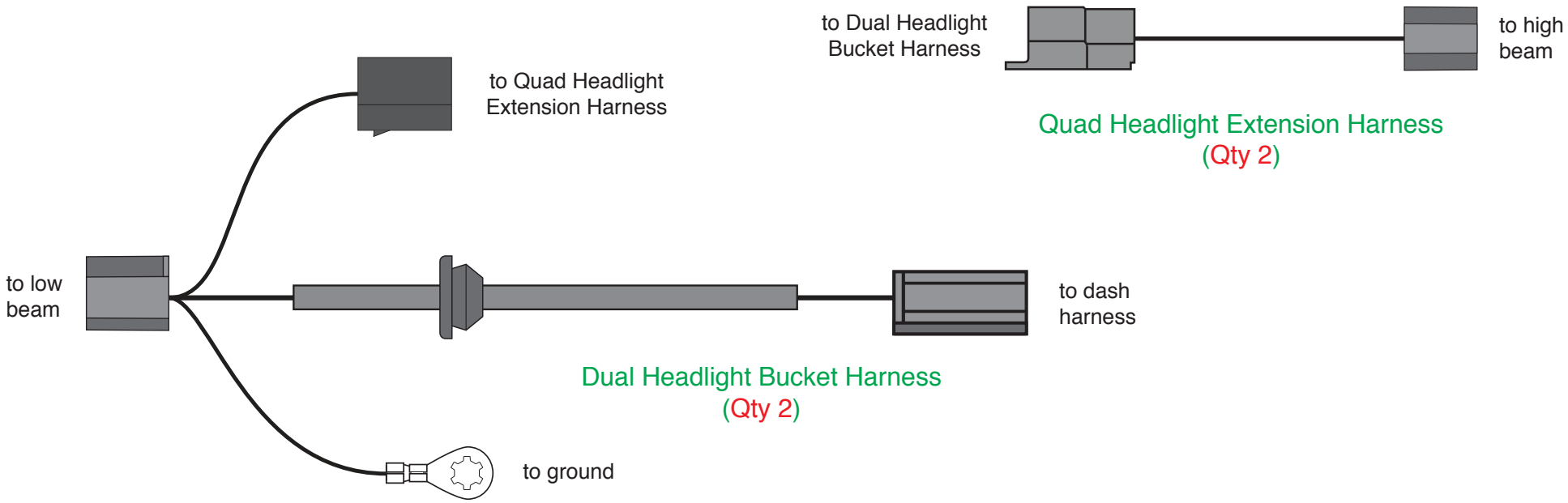

1. There are 2 dual headlight bucket harnesses (used on all vehicles) and 2 quad headlight extension harnesses (used on the **1958-60** vehicles) included in this kit.

2. All Vehicles:
Install a dual headlight bucket harness by routing the 2-way connector that connects to the dash harness **510652** through the headlight bucket from the inside of the bucket to the outside of the bucket. Note that the grommet on the dual headlight bucket harness has an interference fit to the loom and may move. Be careful to seat the grommet in the bucket without displacing the grommet on the loom. The 3-way connector on the dual headlight bucket harness connects to the low beam headlight; the 2-way T-shaped connector on the dual headlight bucket harness will connect to the quad headlight extension harness for vehicles with quad headlights.

3. Quad Headlight Extension Harness:
If you have a **1958-60** vehicle with quad headlights, you will need to connect the quad headlight extension harness to the dual headlight bucket harness that was just installed in step #2. After connecting the two harnesses together, the other 2-way connector on the quad headlight extension harness will connect to the high beam headlight.

American Autowire
www.americanautowire.com 856-933-0801

Classic Update Series
1957-1960 Ford Truck

bag
N

Headlight Bucket Kit

510657

92971657 Rev 0.0 8/24/2016

Classic Update Series

40 — orange

("12 volt battery fused" - used with LED tail lights if needed) Plug into connector "B" and maintain continuity with Dash harness.

17 — lt blue

("Third brake light" - only used when needed) Plug into connector "B" and maintain continuity with Dash harness.

24 — lt green

("Back-up light feed" - only used when needed) Plug into connector "B" and maintain continuity with Dash harness.

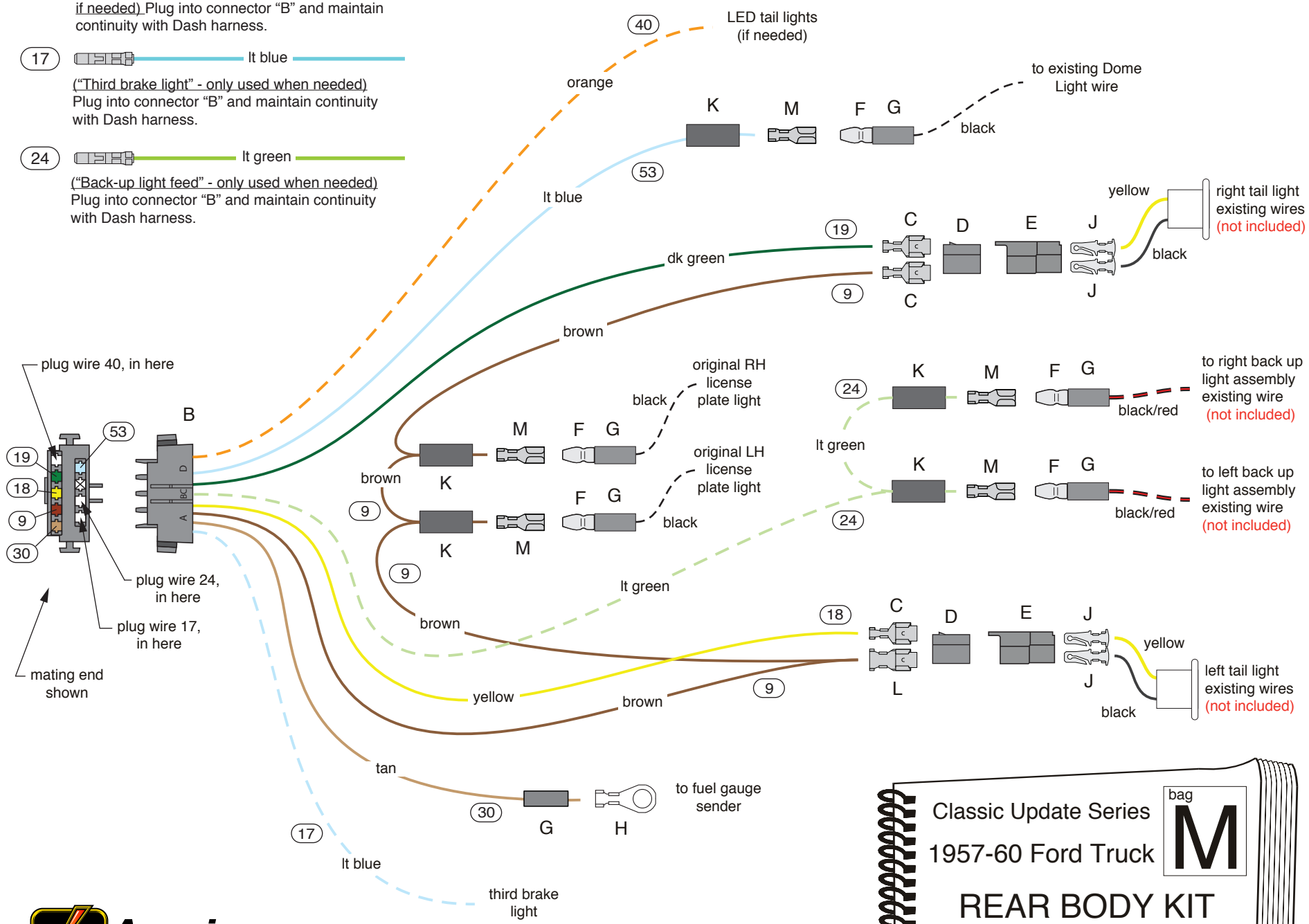

American Autowire

www.americanautowire.com 856-933-0801

Classic Update Series

1957-60 Ford Truck

bag M

REAR BODY KIT

510654

92971649 Rev 0.0 8/26/2016

sheet 1

OPTIONAL WIRES TO BE PLUGGED INTO THE REAR BODY CONNECTOR

Obtain the rear body wiring harness **510654**. If you have an aftermarket third brake light (light blue wire, circuit 17), back-up lights (light green wire, circuit 24), or rear LED tail lights (orange wire, circuit 40), the three wires for these options are in the rear body harness kit, but they are not plugged into the 9-way connector **"B"**. If needed, plug these loose wires into the 9-way connector of the rear body harness connector **"B" (see page 1)**. If the wires are not needed, you will NOT need to plug them into the rear body harness. Connect the rear body harness to the main dash harness **510652**.

WIRES INSIDE THE PASSENGER COMPARTMENT

After connecting the 9-way rear body harness connector to the dash harness connector there will be up to three rear body harness wires that will remain in the passenger compartment. These wires are: the third brake light (circuit 17), the fuel gauge sender (circuit 30), and the dome light (circuit 53). Use the original factory retainers (tabs) to attach the wiring to the vehicle.

Third Brake Light (optional) As mentioned, if you have a third brake light obtain the loose light blue "THIRD BRAKE LIGHT" wire (circuit 17) and plug this wire into the 9-way connector **"B"**. Route this wire up the A or B pillar and over to the third brake light. Connect to the third brake light.

Wire Color	Printing	Wire Number
Light Blue	THIRD BRAKE LIGHT	17

Fuel Gauge Sender Obtain the tan "GAS GAUGE" wire (circuit 30) and route it up the A pillar and back down the B pillar and over to the fuel tank sender assembly. Or as an alternative, you may route this wire along the floor and then to the fuel tank sender assembly. Cut to length, slide on small sleeve **"G"**, and crimp on ring terminal **"H"** and connect to the fuel tank sender assembly.

Wire Color	Printing	Wire Number
Tan	GAS GAUGE	30

Dome Light If you have a dome light, this light requires a switched 12 volt feed wire, this wire is being provided. Obtain the light blue "12V CTSY SW" wire (circuit 53) and route this wire up the A or B pillar and over to the dome light. Cut to length, slide on large sleeve **"K"**, and crimp on female bullet terminal **"M"** and connect to the dome light pigtail.

Wire Color	Printing	Wire Number
Light Blue	12V CTSY SW	53

WIRES OUTSIDE THE PASSENGER COMPARTMENT

Up to five wires: rear running and license light (circuit 9), LH turn (circuit 18), RH turn (circuit 19), back-up lights (circuit 24), and LED tail lights (circuit 40) will route through the firewall and then through the same firewall grommet as the dash harness wires. They will then route down the firewall, along the driver's side frame rail, and to the rear of the vehicle.

NOTE: You will have to replace the connector and terminals on each of your original tail light pigtails with new connectors and terminals. Cut the original molded connectors off of your tail light pigtail and crimp on terminals **"J"** and plug into the 2-way connector **"E" (see page 1 for details)**.

Rear Running Lights and License Light This brown wire is the feed to the tail lights and the license light. Obtain the brown "REAR RUNNING LIGHTS" wire (circuit 9) and route this wire to the LH tail light area, cut to length, double this wire with the cut off portion, install terminal **"L"** and plug into connector **"D" (see page 1)**. Route the loose end of this brown wire to the license light area, cut to length, double this wire with the cut off portion, slide on large sleeve **"K"**, install female bullet terminal **"M"**. Repeat this installation if you have a second license light. Route the loose end of this brown wire to the RH tail light area, cut to length, install terminal **"C"** and plug into connector **"D"**.

Wire Color	Printing	Wire Number
Brown	REAR RUNNING LIGHTS	9

1957-1960 Ford Truck

Left Hand Tail Light Assembly Obtain the yellow "LEFT REAR TURN" wire (circuit 18) and route it to the LH tail light, cut to length, install terminal **"C"** and plug into the empty cavity of connector **"D" (see page 1)**.

Wire Color	Printing	Wire Number
Yellow	**LEFT REAR TURN**	**18**

Right Hand Tail Light Assembly Obtain the dark green "RIGHT REAR TURN" wire (circuit 19) and route it to the RH tail light, cut to length, install terminal **"C"** and plug into the empty cavity of connector **"D" (see page 1)**.

Wire Color	Printing	Wire Number
Dark Green	**RIGHT REAR TURN**	**19**

Back-Up Lights (optional) As mentioned, if you have the optional back-up lights, obtain the loose light green "BACK UP LT SW" wire (circuit 24) and plug this wire into the 9-way connector **"B"**. This light green wire is the feed for the optional back-up lights. Route this wire to the LH back-up light, cut to length, double this wire with the cut off portion, install large sleeve **"K"**, and crimp on female bullet terminal **"M"**, slide sleeve **"K"** onto terminal **"M"**, now connect to the LH back-up light. Route the loose end of this light green wire over to the RH back-up light area, cut to length, install sleeve **"K"**, and crimp on terminal **"M"**, slide sleeve **"K"** onto terminal **"M"**, now connect to the RH back-up light.

Wire Color	Printing	Wire Number
Light Green	**BACK UP LT SW**	**24**

LED Tail Lights (optional)

If you have aftermarket LED tail lights that require a 12 volt Battery feed wire, this wire is being provided. As previously mentioned, obtain the loose orange "12V BATTERY - FUSED" wire (circuit 40) and plug this wire into connector **"B"**. Route this wire to the LED tail lights and connect.

Wire Color	Printing	Wire Number
Orange	**12V BATTERY – FUSED**	**40**

B 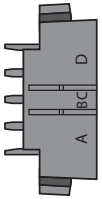

(Rear Body 9-way Pack Con - Reference, 1 pc)

C 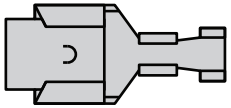
(56 Series single female terminal, 5 pcs)

D 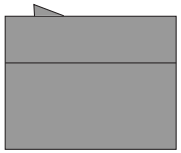
(56 Series 2-way female connector, 2 pcs)

E 
(56 Series 2-way male connector, 2 pcs)

F 
(Single male bullet terminal, 7 pcs)

G 
(Small rubber sleeve, 8 pcs)

H 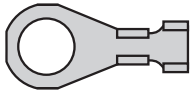
(ring terminal, 2 pcs)

J 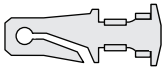
(56 Series single male terminal, 6 pcs)

K 
(Large rubber sleeve, 7 pcs)

L 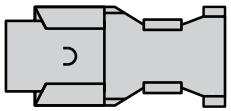
(56 Series double female terminal, 2 pcs)

M 
(Single female bullet terminal, 7 pcs)

THIS PAGE INTENTIONALLY
LEFT BLANK

In this kit you will find the following:

1. One Main Firewall Grommet **F**.
2. Misc. connectors, terminals, and sleeves to complete the Engine Compartment and Passenger Compartment connections.
3. Two large wrap-around clamps **S**, plus screw, nut and washers **R**, to hold the Main Dash Harness bundle in place in the Instrument Panel.
4. Four small wrap-around clamps **G** to hold the Main Dash Harness in place in the Engine Compartment along the Firewall.
5. Two Door Jamb Switches **Y**, for the Interior Lighting.

Use these parts to complete the connections from the Main Dash Harness **510652** to the various components in the Engine Compartment and the Passenger Compartment (see Instructions **92971606**).

The 1957 to 1960 Ford Truck had one round hole in the upper left corner of the Firewall that allowed wiring to pass through from the Passenger Compartment to the Engine Compartment. You will attach Grommet **F**, with a Grommet Retainer of your choice, to this location, prior to passing any wiring through the grommet.

The two **S** Clamps will retain the Dash Harness to the Steering Column Support Bracket. Bolts, Nuts and Washers **R** are provided for these larger clamps. The four **G** Clamps will secure the Dash Harness across the back of the Firewall behind the Engine. You will provide your own fasteners for these smaller clamps.

When connected and installed, the Door Jamb Switches will allow the Dome Light and the new Underdash Courtesy Lamps to function with the opening of the doors.

PART # 510656

DESCRIPTION:

Parts Kit
1957-60 Ford Truck
Classic Update Series

92971655 Rev 1.0 9/5/2018

American Autowire

www.americanautowire.com 856-933-0801

In the box below, you will find the legend for the misc. terminals, plastic connector bodies, and the main firewall grommet, that will be used to complete your main power, forward lighting, engine, and alternator connections. They are itemized and referred to on this page, just as they are on pages 15 and 16 of the Main Instruction set (92971606) and the Fuse Block Mounting Instructions (92971669).

A (large male bullet terminal, 5 pcs.)

B (56 series single female terminal, 24 pcs.)

C (56 series double female terminal, 14 pcs.)

D (large rubber sleeve, 14 pcs.)

E (56 series 1-way female connector, 5 pcs.)

F (grommet, 1 pc.)

G (clamp, “J” style, small, 4 pcs.)

H (small male bullet terminal, 6 pcs.)

J (small rubber sleeve, 14 pcs.)

K (small ring terminal for larger gauge wire, 2 pcs.)

M (small ring terminal for smaller gauge wire, 6 pcs.)

N (56 series 1-way female connector, black, 4 pcs.)

P (56 series 1-way female connector, white, 1 pc.)

Q (56 series 1-way female connector, brown, 1 pc.)

R (1/4” bolt, nut and washer; 2 of each)

S (clamp, “J” style, large, 2 pcs.)

T (56 series 2-way female connector, w/lock wedge, 2 pcs.)

U (56 series 2-way male connector, 2 pcs.)

V (56 series 2-way male connector, w/lock, 2 pcs.)

W (56 series single male terminal, 10 pcs.)

X (56 series double male terminal, 4 pcs.)

Y (door jamb switch, 2 pcs.)

Z (56 series 1-way male connector, 1 pc.)

A (1)

(144.0” 6 Gauge charge wire)

B (2)

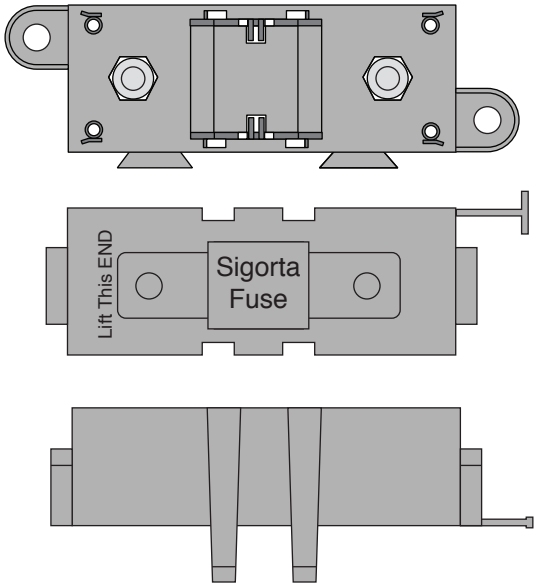

(Megafuse body, cover and two M8 x 1.25 nuts / lock washers)

C (2)

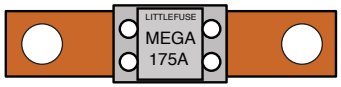

(175 amp Megafuse)

D (1)

(Megafuse jumper)

E (1)

(Alternator boot)

F (1)

(cut into six 1.0” pieces)

1. One this page, you will find the wire, fuse bodies, fuses, boot, ring terminals, and shrink tubing (items A through K) that are necessary to connect your alternator and main power feed for your new AAW wiring kit. Please be sure that all of the necessary components are present before starting this portion of your installation. If anything is missing, stop what you are doing and contact AAW at the number listed below right away.

2. On page 2, you will find directions for building the 2 Megafuse assemblies (items B,C and D) into one unit.

3. On page 3, you will find an overall concept of how to connect the Megafuse assemblies to your starter solenoid, alternator and main power feed of your new wiring system.

4. On page 4, you will find tips on building your charging circuit wires and assembling them and the main panel power feed wire to the Megafuse assembles.

G (2)

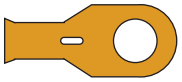

(6Ga. starter ring terminal)

H (3)

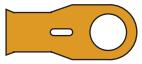

(6Ga. megafuse terminal)

J (2)

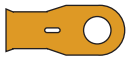

(6Ga. alternator terminal)

K (2)

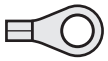

(10Ga. megafuse terminal)

American Autowire

www.americanautowire.com 856-933-0801

PART # 510476 Z

DESCRIPTION:

Alternator and Main Power Connection Kit Various Applications

92972153 instruction sheet rev 0.1 6/24/2019

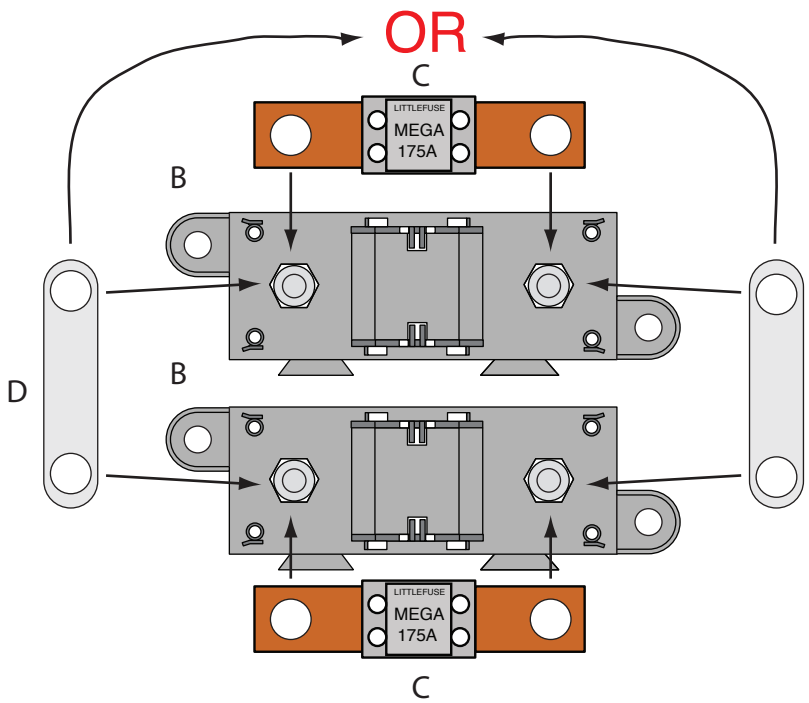

Assembling the (2) Megafuse assemblies

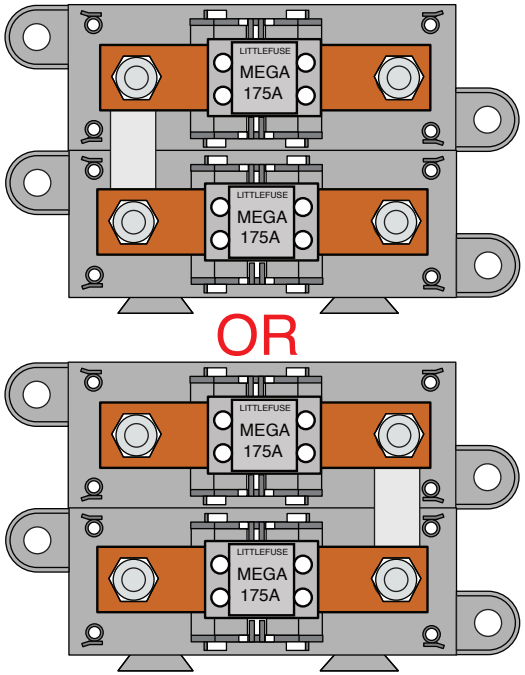

Assembled Megafuses

NOTE: Find a suitable place, as close to the battery power source as possible, under the hood of the your vehicle to mount the completed Megafuse assemblies. Keep in mind that you have 12 feet of 6Ga. charging wire, and that the main power feed coming from your panel or bulkhead connection must also be able to reach the assembly.

1.Take the two Megafuse bodies and covers (items B) and snap them together. Remove the 4 nuts and lock washers from the studs on the fuse body assemblies.

2. Install the Megafuse jumper (item D above) over two of the studs on the Megafuse bodies. It is very important that the jumper MUST BE assembled on the side that is going to connect to your main power connection (starter solenoid or battery feed).

3. Notch top cover to clear jumper D as shown at right.

4. Snap one 175amp fuse (items C) onto the studs of each of the two Megafuse bodies (items B), over the jumper, then loosely re-attach the 4 nuts and lock washers back onto the assembled Megafuses. The fuse assemblies are ready to install into your vehicle.

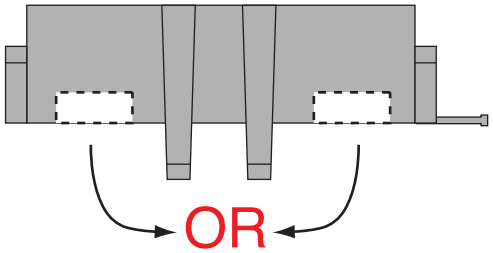

Notched Cover

PART #

510476 Z

DESCRIPTION:

Alternator and Main Power Connection Kit Various Applications

92972153 instruction sheet rev 0.1 6/24/2019

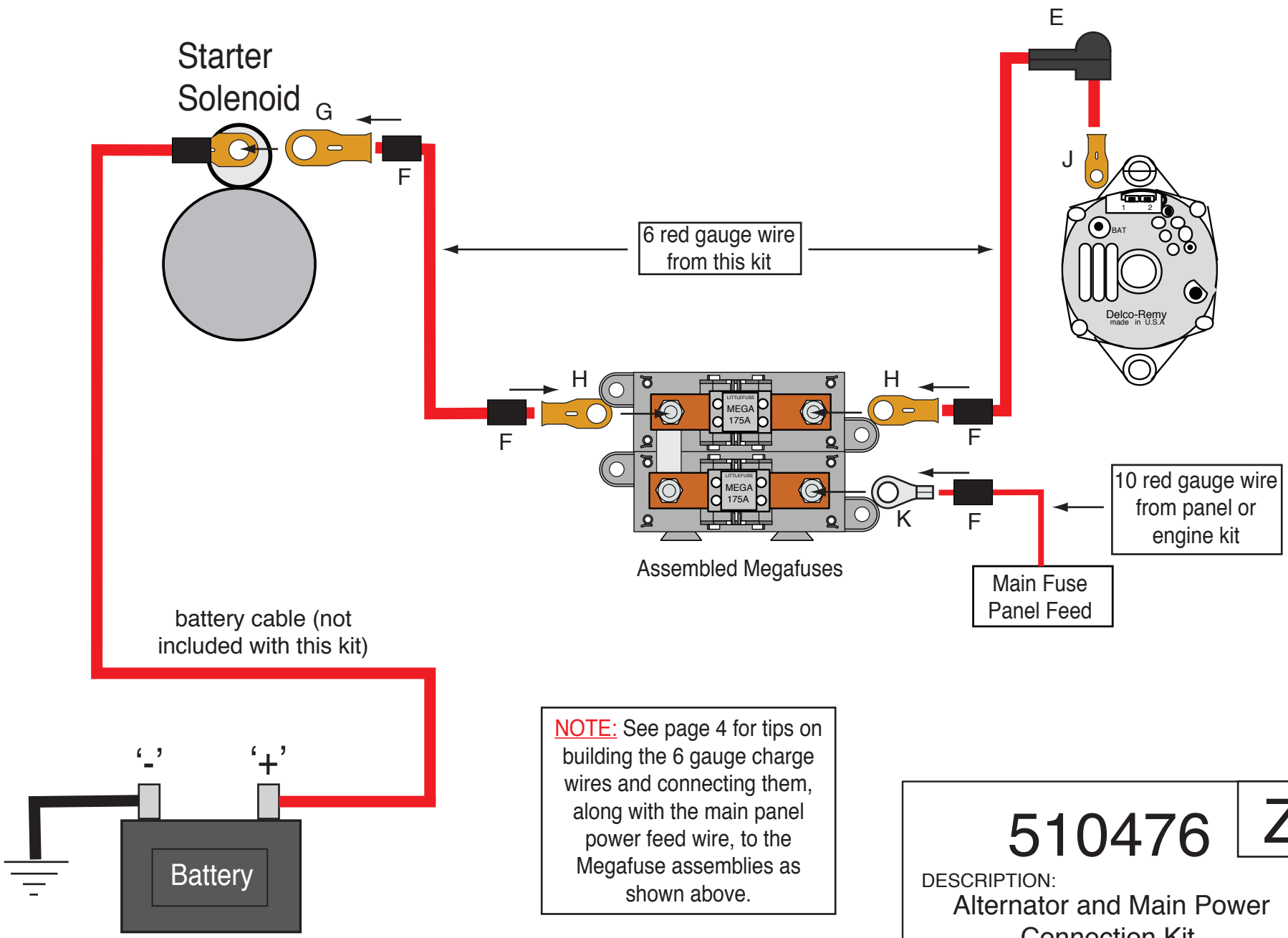

NOTE: See page 4 for tips on building the 6 gauge charge wires and connecting them, along with the main panel power feed wire, to the Megafuse assemblies as shown above.

510476 Z

DESCRIPTION:
Alternator and Main Power Connection Kit
Various Applications

92972153 instruction sheet rev 0.1 6/24/2019

Building the 6Ga. charge wires and connecting them and the main panel power feed wire to the Megafuse assemblies:

NOTE: Make sure that your battery is disconnected! You will need to install the preassembled Megafuses from page 2 in your vehicle to start this part of the installation.

1. Pre-cut item F shrink tubing into (6) 1.00” - 1.25” pieces.

2. Take the 12-foot piece of 6Ga. red wire from this kit and route it from your starter (or other battery feed) over to the area where you have mounted your Megafuse and cut it to length. Strip the insulation on each end back 1/2”. Install 2 pieces of shrink tubing F onto the wire. At the starter end, crimp and solder (1) of terminal G onto the wire. At the Megafuse end, crimp and solder (1) of terminal H onto the wire. Slide the shrink tubing over the terminals and heat it up to shrink it down.

3. Take the remaining portion of the 12-foot piece of 6Ga. red wire from this kit and route it from your alternator over to the area where you have mounted your Megafuse and cut it to length. Strip the insulation on each end back 1/2”. Install 1 piece of shrink tubing F onto the wire. At the alternator end, slip on boot E as shown on page 3, then crimp and solder (1) of terminal J onto the wire. At the Megafuse end, crimp and solder (1) of terminal H onto the wire. Slide the shrink tubing over terminal H and heat it up to shrink it down.

4. Take the 10Ga. red main power feed wire from your engine or panel sub-kit and route it over to the area where you have mounted your Megafuse and cut it to length. Strip the insulation back 3/8”. Install 1 piece of shrink tubing F onto the wire, then crimp and solder (1) of terminal K onto the wire.

5. Remove the 4 loosely tightened nuts and lock washers from the assembled Megafuses, then using the drawing on page 3 as a guide, install your pre-assembled wires from steps 2-4 above. Re-install the 4 nuts and lock washers onto the assembled Megafuses and tighten them down. This part of your installation is now complete.

510476 Z

DESCRIPTION:
Alternator and Main Power Connection Kit
Various Applications

92972153 instruction sheet rev 0.1 6/24/2019

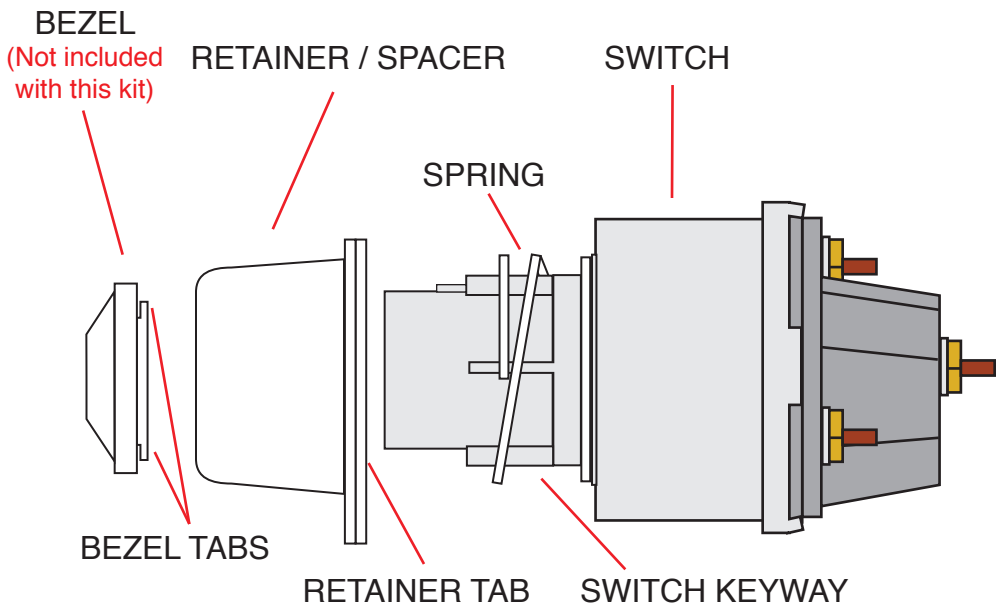

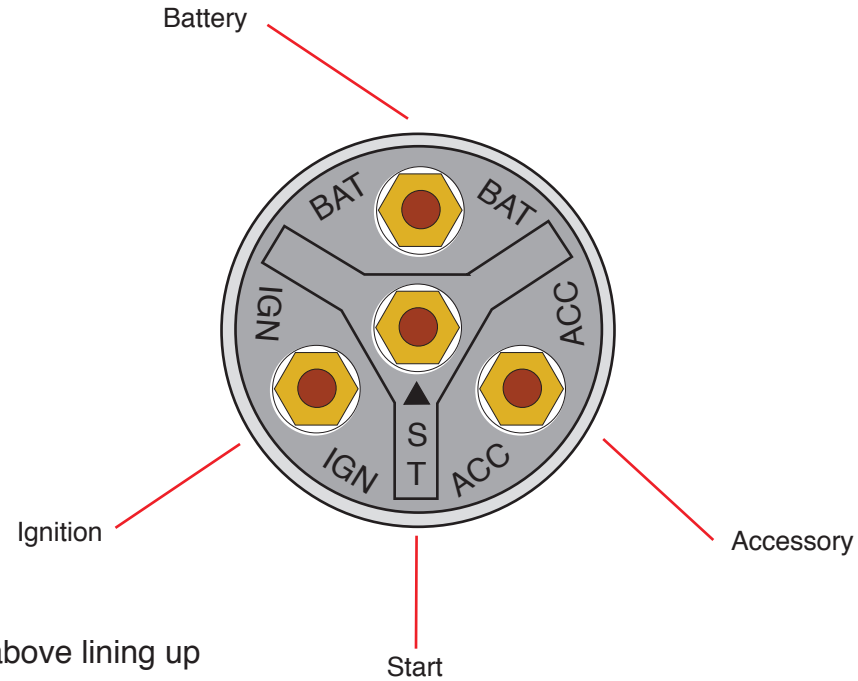

SWITCH ASSEMBLY DIRECTIONS:

1. Push the retainer / spacer down onto the switch assembly as shown above lining up the tab on the retainer with the keyway on the switch.
2. From behind the dash, push the switch and retainer assembly through the opening in the face of the dashboard compressing the spring on the switch so that the front edge of the switch comes through the dashboard opening.
3. With the spring compressed and the switch protruding through the opening in the dash, press the bezel (not included) into the face of the switch aligning the two tabs on the bezel with the openings in the face of the switch, twist the bezel 1/4 turn to your right which will lock the tabs into the switch, release the pressure on the spring where you were pushing the switch assembly through the opening in the dash from behind, and the entire assembly will lock into place.

DASH HARNESS CONNECTIONS:

1. Please refer to the detailed instructions on page 11, circuit node 4, of the 92971606 instructions to properly connect the four wire leads to the switch. Attach the red “12V BAT” wire to the “BAT” stud; attach the pink “IGNITION FEED” wire to the “IGN” stud; attach the purple “NEUTRAL SAFETY SWITCH” wire to the “ST” stud; attach the double brown “IGNITION SW ACCY, ALTERNATOR IGNITION” wires to the “ACC” stud.

American Autowire
150 Heller Pl #17 W Bellmawr, NJ 08031 856-933-0801

PART #

510655

DESCRIPTION:

Ignition Switch and Keys
1957-1960 Ford Truck
Classic Update Series

92971653 instruction sheet rev 0.0 7/22/2016

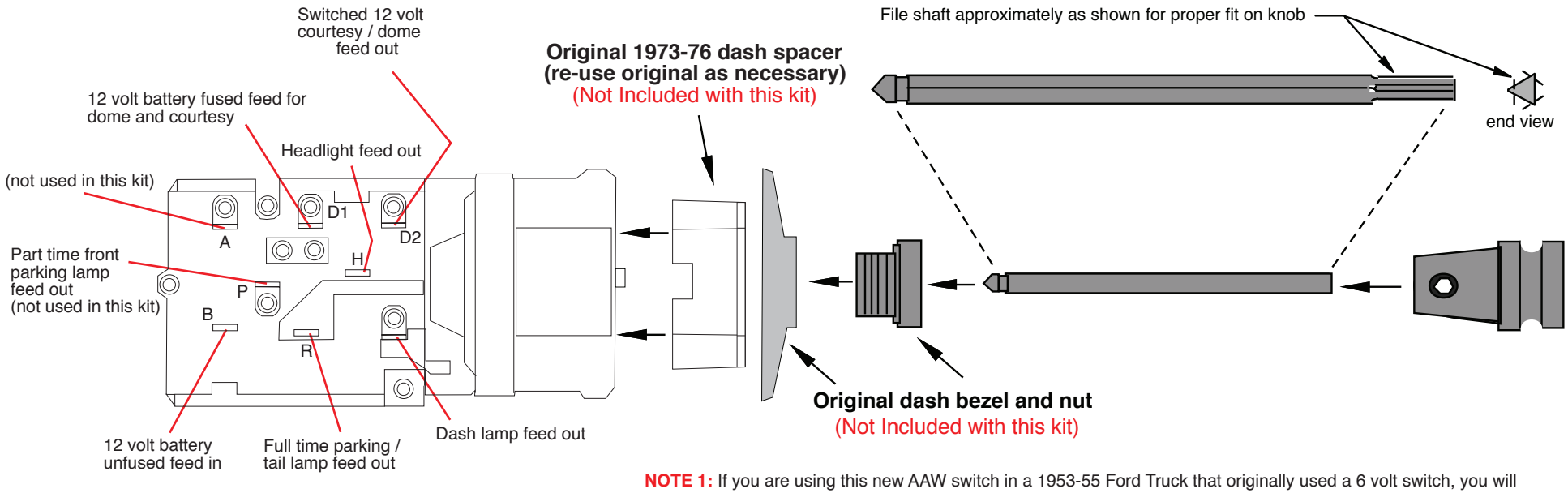

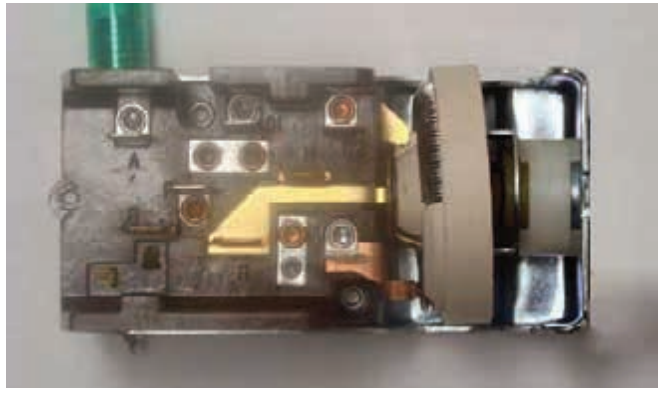

NOTE 1: If you are using this new AAW switch in a 1953-55 Ford Truck that originally used a 6 volt switch, you will find that the threaded area on your original nut is too small in diameter. You will need to purchase a new 1956 12 volt style replacement nut which is larger in diameter and will fit this new AAW switch and still allow for the use of your stock dash bezel. These are readilly available from your favorite truck parts supplier.

NOTE 2: If you are using this new AAW switch for a 1973-76 Ford Truck application, it may be necessary to remove and re-use the dash spacer shown above from your original switch (most are only affixed with double faced tape from the factory), especially if you are planning to use your original shaft and knob assembly. Please check the harness to switch connection for dash clearance issues.

1. Install the new switch into your dash using the original bezel and nut. It will be necessary too cut the shaft for a nice custom installation.
2. Install the shaft in switch being certain that it is fully engaged inside the switch.
   Once the shaft is fully seated down inside the switch in the “off” position, place the knob on end of shaft. Measure how far away from the dash the bottom face of the knob (closest to dash) is. Allow for 1/4’” or so extra so that the knob will not bottom out on dash once the shaft has been cut to length.
3. Remove the shaft from the switch. To do this, pull the shaft completely out to the “on” position. Reach up under the dash and depress the button on top of the switch and pull the shaft out of the switch. Cut the shaft based on your measurements. It may be necessary to file the end of the shaft once it has been cut in order to reinstall the knob onto the shaft.
4. Attach the knob to the cut shaft and tighten the allen screw.
5. Reinstall your newly customized shaft into your headlight switch assembly.

American Autowire

www.americanautowire.com 856-933-0801

PART #

510264

DESCRIPTION:

Headlight Switch 1953-56, 1961-66 & 1973-79 Ford Truck Classic Update Series

92969840 instruction sheet rev 3.0 1/15/2013

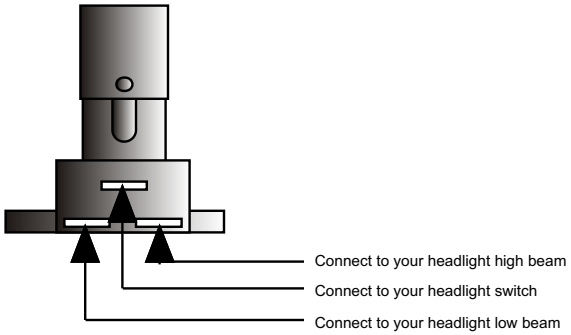

Connect the Dimmer Switch wires as shown above.

1. The top center terminal of the Dimmer Switch is connected to the Headlight switch.
2. The terminal on the right side is connected to your headlight high beam terminal.
3. The terminal on the left side is connected to your headlight low beam terminal.

another wiring product by...

American Autowire

We Make Wiring Easy!!

150 Heller Pl #17 W Bellmawr, NJ 08031 856-933-0801

PART #

500042

DESCRIPTION:

DIMMER SWITCH

92964573 instruction sheet Rev 3.0 6/29/99

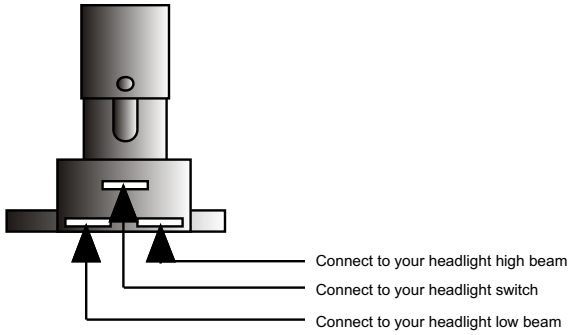

Connect the Dimmer Switch wires as shown above.

1. The top center terminal of the Dimmer Switch is connected to the Headlight switch.
2. The terminal on the right side is connected to your headlight high beam terminal.
3. The terminal on the left side is connected to your headlight low beam terminal.

another wiring product by...

American Autowire

We Make Wiring Easy!!

150 Heller Pl #17 W Bellmawr, NJ 08031 856-933-0801

PART #

500042

DESCRIPTION:

DIMMER SWITCH

92964573 instruction sheet Rev 3.0 6/29/99